G4AON Universal Receiver

AF Pre-amp & CW Filter

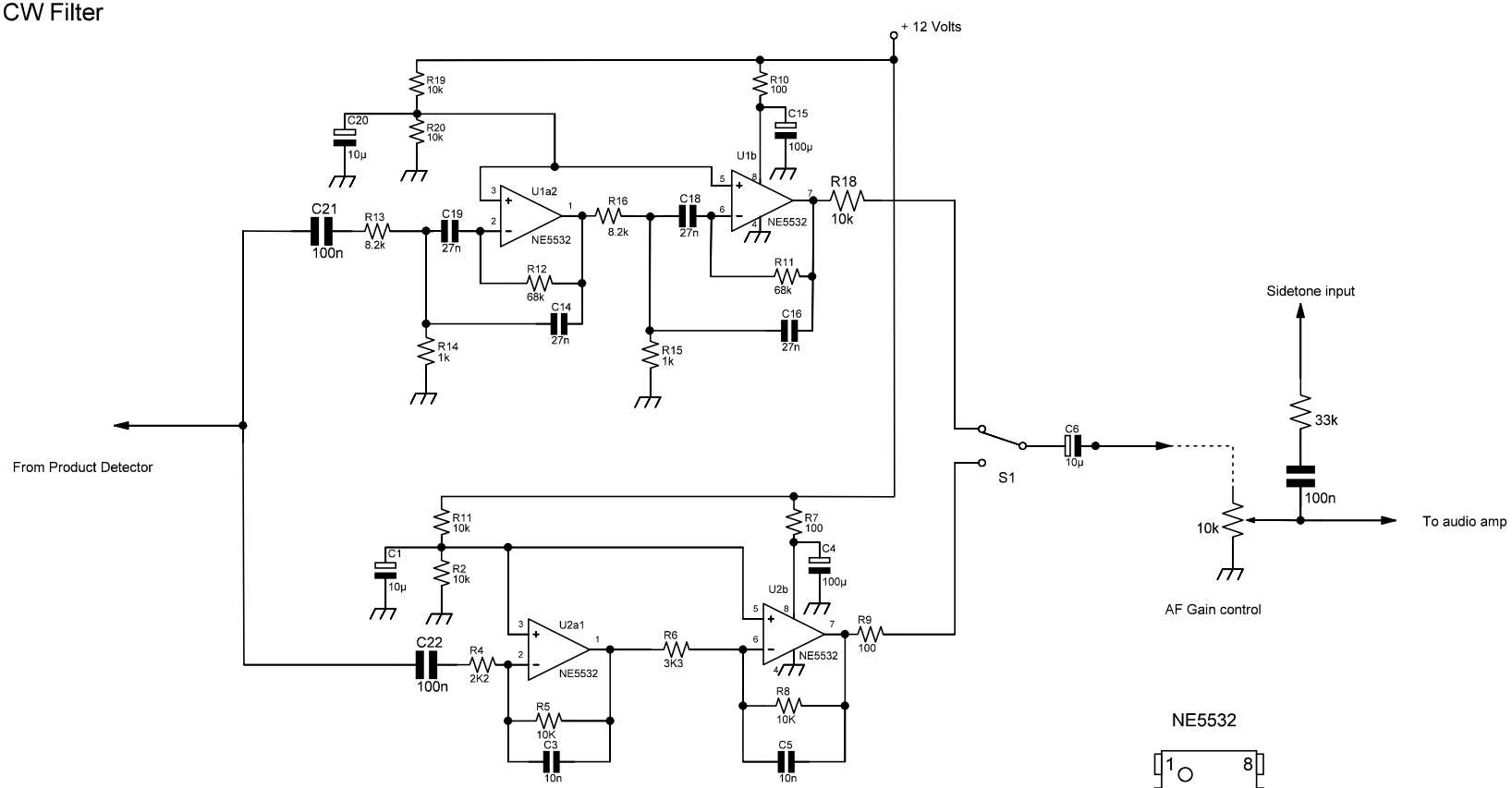

NE5532

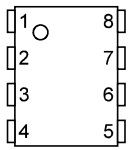

Design Notes

1 Source of LP filter, Experimental Methods in RF Design (ARRL) pg 6.40
Reproduced with permission of ARRL

2 Value of R18 chosen to match level of LP filter with 10K volume pot

Modifications			Date	Name	Description	Pages: 1
Date	Name				G4AON Universal Receiver	
					AF Pre-amp	Page no: 1
		Drawn by			Schematic no:	Original Date
		G4AON			AONRX_AFPRE01, version 2	02-June-2014