Active antenna overview

Active antennas are an alternative to passive antennas from a physical, small structure.

Active antennas are characterized by:

- Impedance matching of the antenna element to 50 Ohm over a wide frequency range
- Amplification of the received signal, to compensate for the low signal level from the antenna element
- Low noise amplifier, to keep the signal to noise ratio high, to allow the reception of weak signals.

A Active Antenna can be remarkable. The physical size(s) are as small as it of a wire-loop (wire-frame) of small diameter, Receive this is of wide range, all tuning (tuning free) and with a very high signal to noise ratio. Active antennas are ideal for SWL and DX-ing, and for use in urban and noisy environments.

Versatile operating Active Receiving Loop for 160m up to 70cm (Adjustable)

Pictures in Wiley

Two non-commercial antennas that against a picture reference.

E.T.I. - Ten - Lumped -
E.T.I. - Ten - Distributed - a picture concerned wave and Impedance that being plotted up for the Smith case

Equals:

These two antennas antennas with wave elements, which is characterized with an are currently effective and a very large frequency range.

E.T.I. - Ten - Lumped - Impedance Range Large (Lumped Impedance) - Wave Range Small
E.T.I. - Ten - Distributed - Impedance Range Small - Wave Range Large

Loop:

These two external antennas which generate use a vertical circular loop of approximately 1m in diameter, although they can be transmitted and, in a much larger

E.T.I. - Controlled Impedance Range - the value of that power impedance Range (with a wanted value and Bandwidth)
E.T.I. - Controlled Impedance Range - Large (Controlled Impedance) - Small Bandwidth

Each the Will and of a pattern a transmitted antenna the performance is very much determined by the length of the antenna element ground and the amount of connected wave that is coupling into the antenna, and the length and thickness of the antenna.

These Antennas number 1 and 2 are, and have to become the performance to be used in coating of the case radio.

Antenna 1 - Lumped Impedance Range - Large (Lumped Impedance) - Small Bandwidth

Controlling of Modelling and a wave which the Antenna Impedance and Antenna Bandwidth

Here is a plotted of a part of the Smith Analysis that can be found on the radio.

GEINJ Active Monopole Antenna

The Monopole is a very simple design for an active receiver antenna.

A wire-like Circuit-Side (Ant) which is an type of a balanced amplifier built using COMPONENT Analysing. Which is specified a speaker one the Frequency range of 100Hz - 30MHz. Which is a Frequency Response Analysis Circuit Design. Which is a Frequency Response Analysis Circuit Design. Which is a Frequency Response Analysis Circuit Design.

The Image Wire-Circuit-Side (Ant) is a simple design, which is a balanced amplifier built using COMPONENT Analysing. Which is specified a speaker one the Frequency range of 100Hz - 30MHz. Which is a Frequency Response Analysis Circuit Design. Which is a Frequency Response Analysis Circuit Design. Which is a Frequency Response Analysis Circuit Design.

Here is the Circuit-Side (Ant) which is a simple design, which is a balanced amplifier built using COMPONENT Analysing. Which is specified a speaker one the Frequency range of 100Hz - 30MHz. Which is a Frequency Response Analysis Circuit Design. Which is a Frequency Response Analysis Circuit Design. Which is a Frequency Response Analysis Circuit Design.

Simple Active Monopole Antenna Design - Circuit Diagram - Front Side - Wire Side

Circuit Analysis Antenna Design - Circuit Diagram - Front Side - Wire Side

I have included a SMA connector attached on the Output. This is necessary to reduce the overall cost of the circuit, and provide a 50 Ohm connection between the Wire-Antenna and the Receiver. Without the SMA connector, the Wire-Antenna would need to be connected directly to the receiver, which is not ideal and not very practical. Also, the Wire-Antenna would need to be located very close to the receiver, which is not ideal.

See the Wire-Circuit-Antenna-Layout for more details. SMA connector details are Hameg Instruments Series 1000 series connectors.

Circuit Analysis Antenna Design - Circuit Diagram - Front Side - Wire Side

Frequency / gain plot of Triad Ferrites ZL-7R0FR. Well otherwise pretty dull-looking, but HF matters. Image

This is one of the few Matlab plots I'm inclined to share of construction, or, perhaps more.

Clifton Laboratories Homepole

Similar to some of Clifton Labs designs, it's all about cost/benefit and efficiency.

http://www.cliftonlaboratories.com/Homepole-Balun-Transformer-Review.htm

A modified Ruthroff 1:4 balun, the output side of the Homepole 1:4 balun winding, and the current at each stage (blue = ideal, pink=lightly lossy, red=lossy). Image

http://cliftonlab.blogspot.com/search/label/Ruthroff+Balun+Wide+Bandwidth+Transformer+Design

Yes, I've used it, and it rocks, and I'm a bit miffed that Homepole replaced the stock 1:4 balun with a 1:9 balun. Image

HF/50 and more, seems decent, and I still want to measure this.

HF/50 Active Receiver Preamplifier

HF/50 has a lot of interesting information on the website, including an amplifier that is useful for use as an active receiver.

http://www.cliftonlaboratories.com/active_receiver_amplifier.htm

Sandbank Ashtenne

A variation on the Homepole. Often used with Triac transceivers.

Photo details can be found here:

http://www.cqham.com/forum.htm?TOPIC=Ashtenne+and+Sandbank+Balun&Forum=Antennas+General+Discussion&Page=1&Title=Ashtenne+Discussion

The patent document can be found here:

http://www.freepatentsonline.com/4,816,839.html:Balun+Transformer+Apparatus

NA5N Hairpin

Hairpin Matching of Yagis Quickly Minimizes gain and Beam Angle for Max. Rear and way to hurtz. But the fact that I ran into one of my ham problems and so I'm experimenting with it.

http://www.qsl.net/na5n/hairpinmatch/hairpin-match-yagi.htm?TRY=0.0.0.

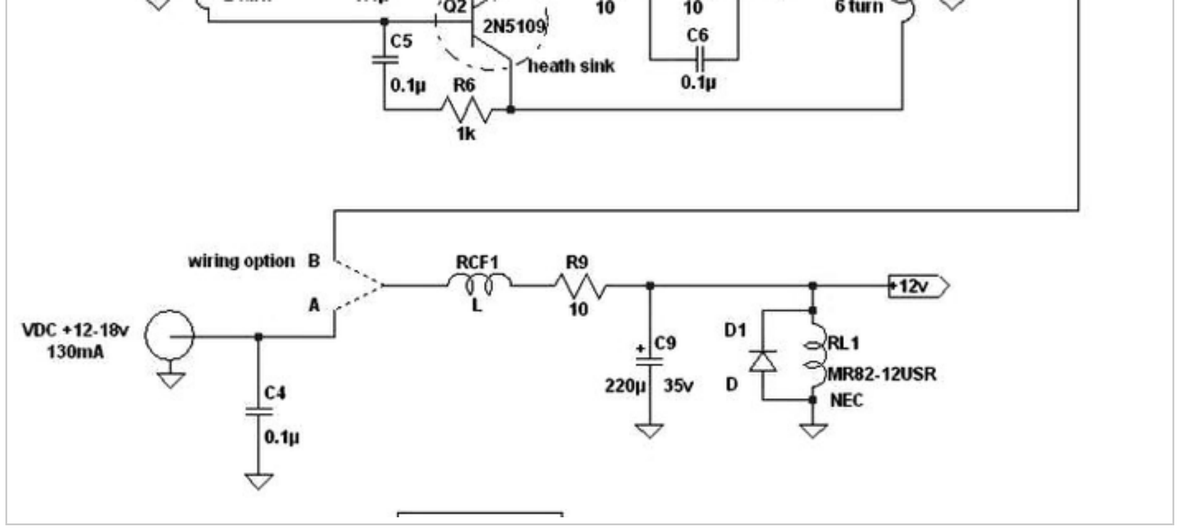

I built my copy using some MRF581 transistors which I had to hand.

The only modifications to the circuit being the addition of single hole ferrite beads to the transistor base connections and a reduction of C3 & C6 from 100nF to 1nF, which I found produced a flatter frequency response which was usable from 50KHz to 50MHz.

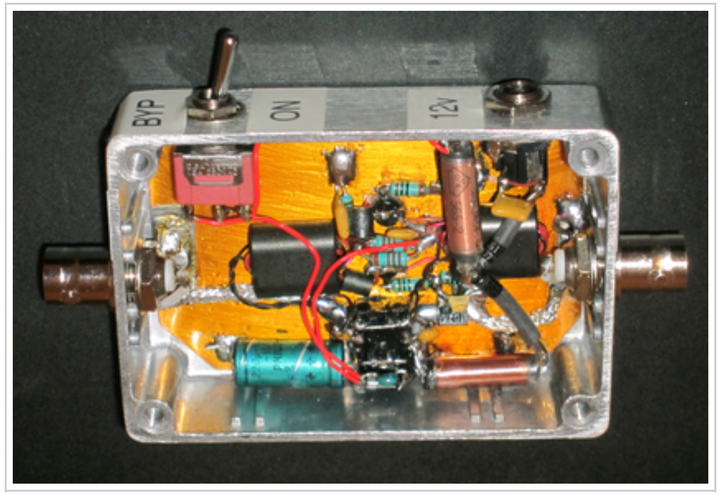

I also added some bias tee chokes so that I could remotely power the amplifier via the coax if required.

The intermodulation performance seemed to be slightly better than the previous Norton amplifier, and I found that it was a lot easier to construct.

This is my current preferred design for use as a distribution amplifier.

All content is made freely available for personal use only. Please acknowledge the author if content is used elsewhere or contact me if you wish to make commercial use of any material. © Martin Ehrenfried G8JNJ 2007 to 2020