Modeling Antenna Systems – I

Your Antenna System is the second most important part of your station.

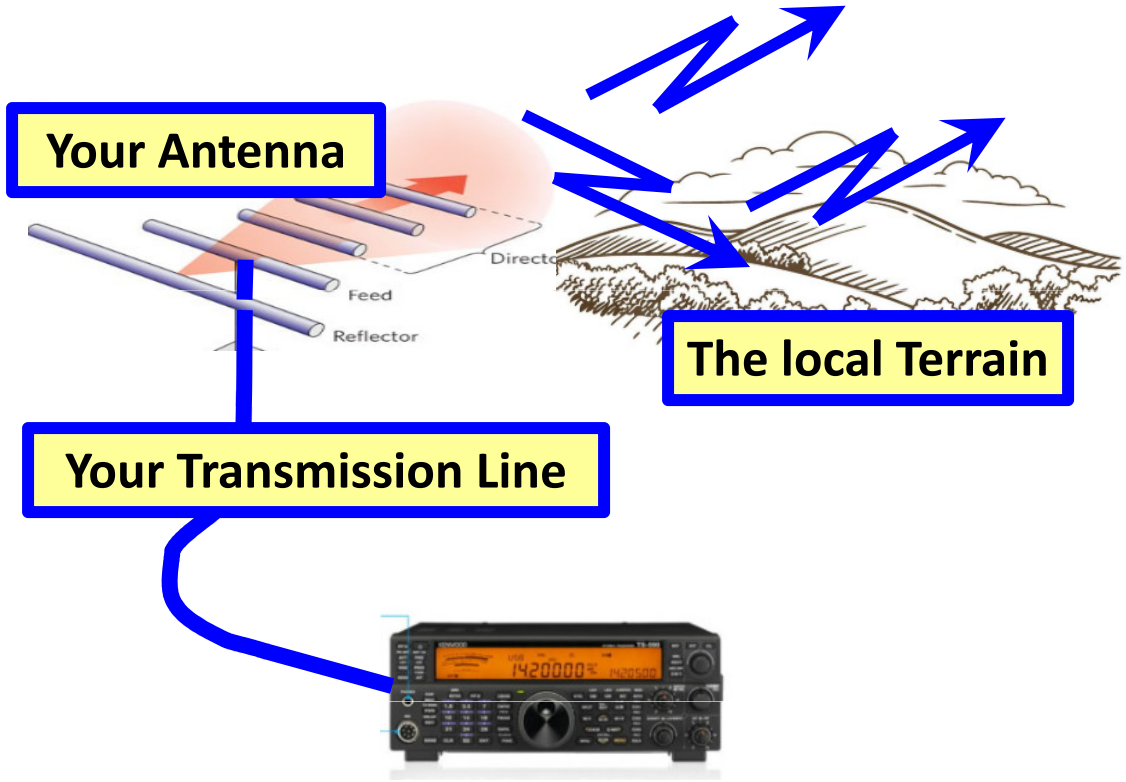



Larry Banks, W1DYJ

Licensed: 1961 (KN1VFX)
W1DYJ since 1966

10B DXCC [inc. 60m]
DXCC Worked-304 Conf-302
DXCC Trident 200 [PH:246 CW:252 DIG:279]
DX Challenge: 1990
8B WAS
6M VUCC [Conf: 762 grids]
As of 11 November 2026

All Low Power

W1DYJ ~ Larry Banks

Modeling Antenna Systems – I

This presentation will help you learn how to analyze your antenna's SWR, far field response, antenna currents, and more

Part I – Antenna Characteristics

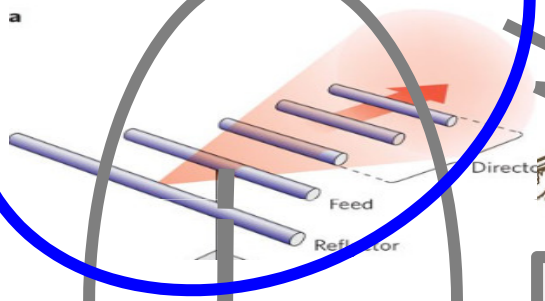

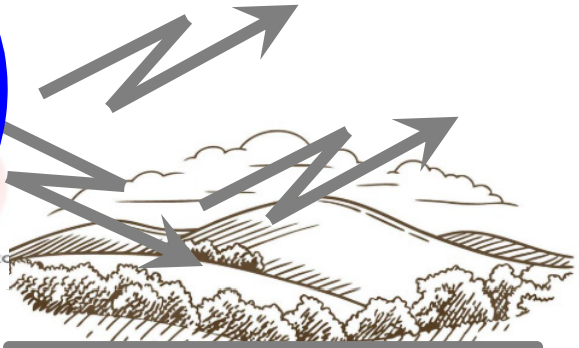

Part II – The Effect of Terrain



Part II – The Transmission Line

W1DYJ ~ Larry Banks

Life Member

International DX Association

INDEXA

NORTHERN CALIFORNIA DX FOUNDATION, INC.

Modeling Antenna Systems – I

Why Analyze (model) your antenna system?

Part I – Antenna Characteristics

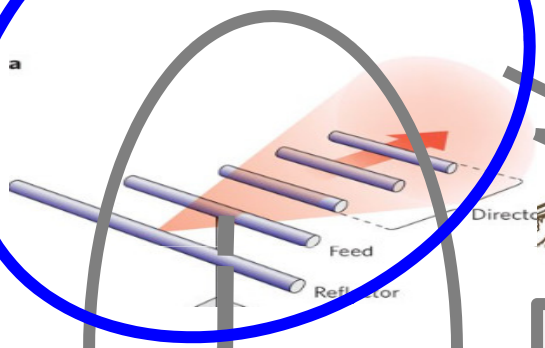



Part II – The Effect of Terrain

Part II – The Transmission Line



Much cheaper and faster than building and rebuilding them!

W1DYJ ~ Larry Banks

Modeling Antenna Systems – I – Agenda

- The motivation behind my interest in antennas
- NEC: Numerical Electromagnetics Code
- Antenna Modeling Software
- EZNEC
- Appendix

The Goal:

You will learn some theory and gain some additional understanding about your antenna systems.

"All models are wrong. Some are useful"

British Statistician *George Box*, 1976

Life Member
International DX Association
INDEXA
NORTHERN CALIFORNIA DX FOUNDATION, INC.

Modeling Antenna Systems – I

The motivation behind my interest in antennas

- New novice KN1VFX – 1961-62
- *I knew nothing about antennas*
- I built an 80m CW transmitter
- I fed my end-fed random wire out of my 2nd floor bedroom window
- I heard nothing

Modeling Antenna Systems – I

The motivation behind my interest in antennas

- New novice **KN1VFX** – 1961-62
- *I knew nothing about antennas*
- I built an 80m CW transmitter
- I fed my end-fed random wire out of my 2nd floor bedroom window
- I heard nothiing

My first "real" antenna
$16.95 was "big bucks"
for a junior in HS in 1962
[~$185 today]

A 1962 QST Ad

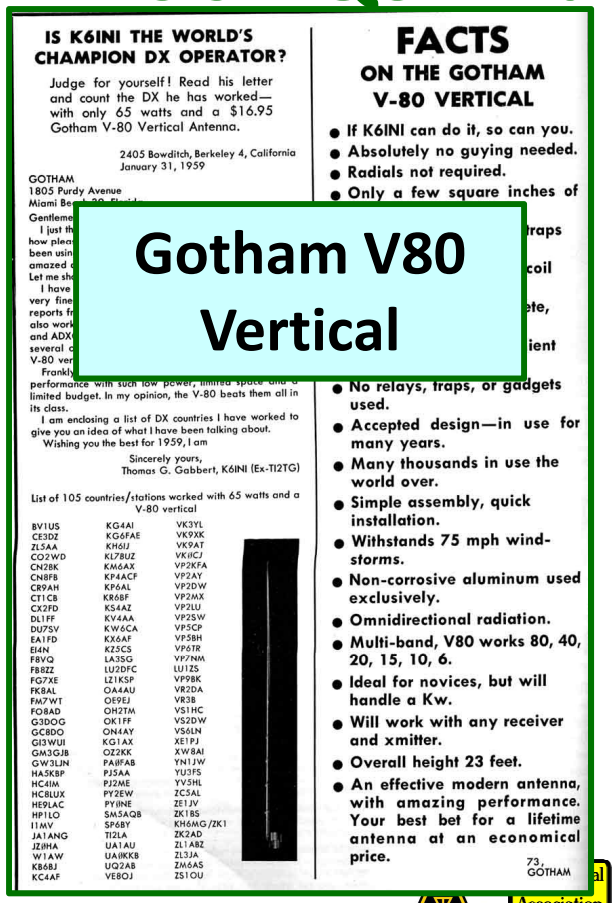

IS K6INI THE WORLD'S CHAMPION DX OPERATOR?

Judge for yourself! Read his letter and count the DX he has worked—with only 65 watts and a $16.95 Gotham V-80 Vertical Antenna.

2405 Bowditch, Berkeley 4, California
January 31, 1959

GOTHAM
1805 Purdy Avenue
Miami Be

Gentleme
I just th
how plea
been usin
amazed
Let me sh
I have
very fine
reports fr
also work
and ADX
several
V-80 ver
Frankl
performance with such low power, limited space and a limited budget. In my opinion, the V-80 beats them all in its class.

I am enclosing a list of DX countries I have worked to give you an idea of what I have been talking about.

Wishing you the best for 1959, I am

Sincerely yours,
Thomas G. Gabbert, K6INI (Ex-TI2TG)

List of 105 countries/stations worked with 65 watts and a V-80 vertical

BV1US	KG4AI	VK3YL
CE3DZ	KG6FAE	VK9XK
ZL5AA	KH6IJ	VK9AT
CO2WD	KL7BUZ	VK9CJ
CN2BK	KM6AX	VP2KFA
CN8FB	KP4ACF	VP2AY
CR9AH	KP6AL	VP2DW
CT1CB	KR6BF	VP2MX
CX2FD	KS4AZ	VP2LU
DL1FF	KV4AA	VP2SW
DU7SV	KW6CA	VP5CP
EA1FD	KX6AF	VP5BH
EI4N	KZ5CS	VP6TR
F8VQ	LA3SG	VP7NM
F8BZZ	LU2DFC	LU1ZS
FG7XE	LZ1KSP	VP9BK
FK8AL	OA4AU	VR2DA
FM7WT	OE9EJ	VR3B
FO8AD	OH2TM	VS1HC
G3DOG	OK1FF	VS2DW
GC8DO	ON4AY	VS6LN
GI3WUI	KG1AX	XE1PJ
GM3GJB	OZ2KK	XW8AI
GW3LJN	PA9FAB	YN1JW
HA5KBP	PJ5AA	YU3FS
HC4IM	PJ2ME	YV5HL
HC8LUX	PY2EW	ZC5AL
HE9LAC	PY9NE	ZE1JV
HP1LO	SM5AQB	ZK1BS
I1MV	SP6BY	KH6MG/ZK1
JA1ANG	TI2LA	ZK2AD
JZ0HA	UA1AU	ZL1ABZ
W1AW	UA9KKB	ZL3JA
KB6BJ	UQ2AB	ZM6AS
KC4AF	VE8OJ	ZS1OU

FACTS ON THE GOTHAM V-80 VERTICAL

- If K6INI can do it, so can you.
- Absolutely no guying needed.
- Radials not required.
- Only a few square inches of
- traps
- coil
- ete,
- ient
- No relays, traps, or gadgets used.
- Accepted design—in use for many years.
- Many thousands in use the world over.
- Simple assembly, quick installation.
- Withstands 75 mph wind-storms.
- Non-corrosive aluminum used exclusively.
- Omnidirectional radiation.
- Multi-band, V80 works 80, 40, 20, 15, 10, 6.
- Ideal for novices, but will handle a Kw.
- Will work with any receiver and xmitter.
- Overall height 23 feet.
- An effective modern antenna, with amazing performance. Your best bet for a lifetime antenna at an economical price.

73,
GOTHAM

Gotham V80 Vertical

Modeling Antenna Systems – I

The motivation behind my interest in antennas

Radials not required

- I never worked anyone – best DX was a 40M official "Out of Band" report
- As a result, I never really learned CW
- Therefore never got my General

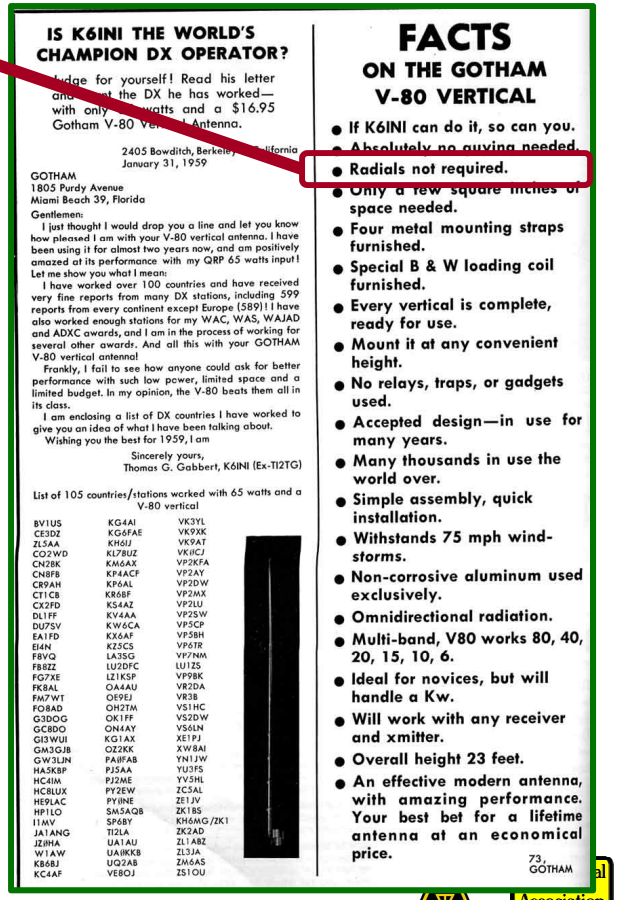

IS K6INI THE WORLD'S CHAMPION DX OPERATOR?

...dge for yourself! Read his letter ... the DX he has worked—with only ... watts and a $16.95 Gotham V-80 Ver... Antenna.

2405 Bowditch, Berkeley, ...lifornia
January 31, 1959

GOTHAM
1805 Purdy Avenue
Miami Beach 39, Florida

Gentlemen:

I just thought I would drop you a line and let you know how pleased I am with your V-80 vertical antenna. I have been using it for almost two years now, and am positively amazed at its performance with my QRP 65 watts input! Let me show you what I mean:

I have worked over 100 countries and have received very fine reports from many DX stations, including 599 reports from every continent except Europe (589)! I have also worked enough stations for my WAC, WAS, WAJAD and ADXC awards, and I am in the process of working for several other awards. And all this with your GOTHAM V-80 vertical antenna!

Frankly, I fail to see how anyone could ask for better performance with such low power, limited space and a limited budget. In my opinion, the V-80 beats them all in its class.

I am enclosing a list of DX countries I have worked to give you an idea of what I have been talking about.

Wishing you the best for 1959, I am

Sincerely yours,
Thomas G. Gabbert, K6INI (Ex-TI2TG)

List of 105 countries/stations worked with 65 watts and a V-80 vertical

BV1US	KG4AI	VK3YL
CE3DZ	KG6FAE	VK9XK
ZL5AA	KH6IJ	VK9AT
CO2WD	KL7BUZ	VK9CJ
CN2BK	KM6AX	VP2KFA
CN8FB	KP4ACF	VP2AY
CR9AH	KP6AL	VP2DW
CT1CB	KR6BF	VP2MX
CX2FD	KS4AZ	VP2LU
DL1FF	KV4AA	VP2SW
DU7SV	KW6CA	VP5CP
EA1FD	KX6AF	VP5BH
EI4N	KZ5CS	VP6TR
F8VQ	LA3SG	VP7NM
F8BZZ	LU2DFC	LU1ZS
FG7XE	LZ1KSP	VP9BK
FK8AL	OA4AU	VR2DA
FM7WT	OE9EJ	VR3B
FO8AD	OH2TM	VS1HC
G3DOG	OK1FF	VS2DW
GC8DO	ON4AY	VS6LN
GI3WUI	KG1AX	XE1PJ
GM3GJB	OZ2KK	XW8AI
GW3LJN	PA9FAB	YN1JW
HA5KBP	PJ5AA	YU3FS
HC4IM	PJ2ME	YV5HL
HC8LUX	PY2EW	ZC5AL
HE9LAC	PY9NE	ZE1JV
HP1LO	SM5AQB	ZK1BS
I1MV	SP6BY	KH6MG/ZK1
JA1ANG	TI2LA	ZK2AD
JZ0HA	UA1AU	ZL1ABZ
W1AW	UA9KKB	ZL3JA
KB6BJ	UQ2AB	ZM6AS
KC4AF	VE8OJ	ZS1OU

FACTS
ON THE GOTHAM V-80 VERTICAL

- If K6INI can do it, so can you.
- Absolutely no guying needed.
- Radials not required.
- Only a few square inches of space needed.
- Four metal mounting straps furnished.
- Special B & W loading coil furnished.
- Every vertical is complete, ready for use.
- Mount it at any convenient height.
- No relays, traps, or gadgets used.
- Accepted design—in use for many years.
- Many thousands in use the world over.
- Simple assembly, quick installation.
- Withstands 75 mph wind-storms.
- Non-corrosive aluminum used exclusively.
- Omnidirectional radiation.
- Multi-band, V80 works 80, 40, 20, 15, 10, 6.
- Ideal for novices, but will handle a Kw.
- Will work with any receiver and xmitter.
- Overall height 23 feet.
- An effective modern antenna, with amazing performance. Your best bet for a lifetime antenna at an economical price.

73,
GOTHAM

Modeling Antenna Systems – I

The motivation behind my interest in antennas

Radials not required

- I never worked anyone – Best DX was a 40M official "Out of Band" report
- As a result, I never really learned CW
- Therefore never got my General
- I do not believe antenna advertisements
- I learned that *you need to understand the physics* of antennas
- This led me to antenna modeling

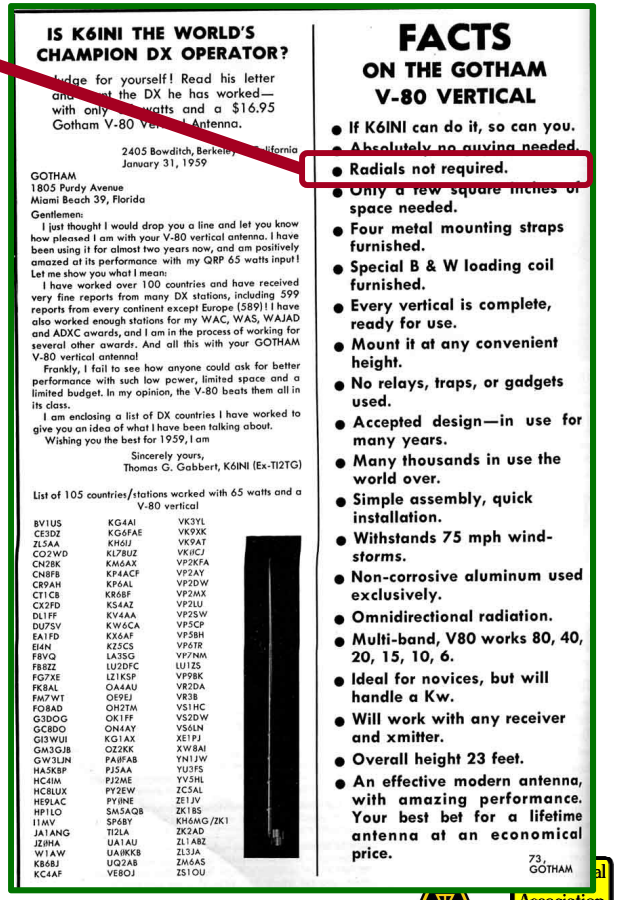

IS K6INI THE WORLD'S CHAMPION DX OPERATOR?

...dge for yourself! Read his letter ... the DX he has worked—with only ... watts and a $16.95 Gotham V-80 Ver... Antenna.

2405 Bowditch, Berkeley, ...lifornia
January 31, 1959

GOTHAM
1805 Purdy Avenue
Miami Beach 39, Florida

Gentlemen:

I just thought I would drop you a line and let you know how pleased I am with your V-80 vertical antenna. I have been using it for almost two years now, and am positively amazed at its performance with my QRP 65 watts input! Let me show you what I mean:

I have worked over 100 countries and have received very fine reports from many DX stations, including 599 reports from every continent except Europe (589)! I have also worked enough stations for my WAC, WAS, WAJAD and ADXC awards, and I am in the process of working for several other awards. And all this with your GOTHAM V-80 vertical antenna!

Frankly, I fail to see how anyone could ask for better performance with such low power, limited space and a limited budget. In my opinion, the V-80 beats them all in its class.

I am enclosing a list of DX countries I have worked to give you an idea of what I have been talking about.

Wishing you the best for 1959, I am

Sincerely yours,
Thomas G. Gabbert, K6INI (Ex-TI2TG)

List of 105 countries/stations worked with 65 watts and a V-80 vertical

BV1US	KG4AI	VK3YL
CE3DZ	KG6FAE	VK9XK
ZL5AA	KH6IJ	VK9AT
CO2WD	KL7BUZ	VK4CJ
CN2BK	KM6AX	VP2KFA
CN8FB	KP4ACF	VP2AY
CR9AH	KP6AL	VP2DW
CT1CB	KR6BF	VP2MX
CX2FD	KS4AZ	VP2LU
DL1FF	KV4AA	VP2SW
DU7SV	KW6CA	VP5CP
EA1FD	KX6AF	VP5BH
EI4N	KZ5CS	VP6TR
F8VQ	LA3SG	VP7NM
FB8ZZ	LU2DFC	LU1ZS
FG7XE	LZ1KSP	VP9BK
FK8AL	OA4AU	VR2DA
FM7WT	OE9EJ	VR3B
FO8AD	OH2TM	VS1HC
G3DOG	OK1FF	VS2DW
GC8DO	ON4AY	VS6LN
GI3WUI	KG1AX	XE1PJ
GM3GJB	OZ2KK	XW8AI
GW3LJN	PA9FAB	YN1JW
HA5KBP	PJ5AA	YU3FS
HC4IM	PJ2ME	YV5HL
HC8LUX	PY2EW	ZC5AL
HE9LAC	PY9NE	ZE1JV
HP1LO	SM5AQB	ZK1BS
I1MV	SP6BY	KH6MG/ZK1
JA1ANG	TI2LA	ZK2AD
JZ0HA	UA1AU	ZL1ABZ
W1AW	UA9KKB	ZL3JA
KB6BJ	UQ2AB	ZM6AS
KC4AF	VE8OJ	ZS1OU

FACTS ON THE GOTHAM V-80 VERTICAL

- If K6INI can do it, so can you.
- Absolutely no guying needed.
- Radials not required.
- Only a few square inches of space needed.
- Four metal mounting straps furnished.
- Special B & W loading coil furnished.
- Every vertical is complete, ready for use.
- Mount it at any convenient height.
- No relays, traps, or gadgets used.
- Accepted design—in use for many years.
- Many thousands in use the world over.
- Simple assembly, quick installation.
- Withstands 75 mph wind-storms.
- Non-corrosive aluminum used exclusively.
- Omnidirectional radiation.
- Multi-band, V80 works 80, 40, 20, 15, 10, 6.
- Ideal for novices, but will handle a Kw.
- Will work with any receiver and xmitter.
- Overall height 23 feet.
- An effective modern antenna, with amazing performance. Your best bet for a lifetime antenna at an economical price.

73,
GOTHAM

Modeling Antenna Systems – I – Agenda

- The motivation behind my interest in antennas
- **NEC: Numerical Electromagnetics Code**
- Antenna Modeling Software
- EZNEC
- Appendix

Modeling Antenna Systems – I – NEC

NEC: Numerical Electromagnetics Code

Uses a ***Method of Moments*** algorithm *(fields from many mutually-coupled straight-line segments are evaluated and vector-summed)*

- **NEC-2** (1980) – available to the public and free
- NEC-4 (1992) v4.2 (2011)
  - Requires license: $110 from Lawrence Livermore Labs
  - Fixes stepped wires; wire junction; ground issues, etc.
- **NEC-5** (2020) **[ver x13]** (2022)
  - Requires license: $110/3-years from Lawrence Livermore Labs
  - Allows buried conductors and other improvements

Modeling Antenna Systems – I – Agenda

- The motivation behind my interest in antennas
- NEC: Numerical Electromagnetics Code
- **Antenna Modeling Software**
- EZNEC
- Appendix

Antenna Modeling Software

YW ARRL Antenna Book [fast, monoband Yagis, old]

NEC-Win Plus/Pro [legacy software / NEC2]

MiniNEC Pro ($29) [custom core – not NEC]

MMANA-GAL (Free) [uses miniNec engine]

4nec2 (Free) [NEC2 / NEC4-$]

EZNEC Pro (Free) [NEC2 / NEC4-$ / NEC5-$]

AutoEZ (AC6LA) $79 (automates EZNEC)

Modeling Antenna Systems – I – EZNEC Agenda

- The motivation behind my interest in antennas
- NEC: Numerical Electromagnetics Code
- Antenna Modeling Software
- **EZNEC**
  - **EZNEC Intro**
  - **Modeling a 40M dipole**
  - **Ground Characteristics**
  - **Example**

EZNEC - Intro

Basic Purpose: from an X-Y-Z "wires" description of an antenna, generate tabular and graphical outputs of SWR, far field response, RF antenna currents, etc.

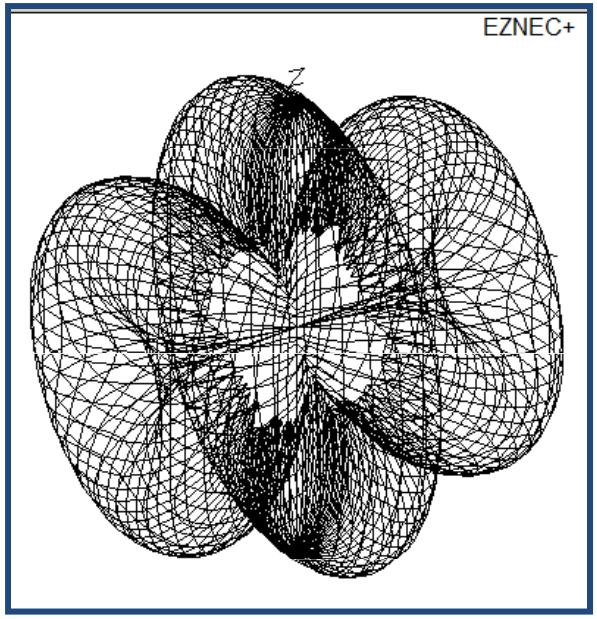

Modeling Antenna Systems – I – EZNEC History

W7EL's (Roy Lewallen) website: http://eznec.com

Before 2022

• EZNEC v.??? ARRL Version	**(20 segments)**	free	NEC-2
• EZNEC v.6.0	**(500 segments)**	$ 99	NEC-2
• EZNEC+ v. 6.0	**(2K segments + more features)**	$149	NEC-2
• EZNEC Pro/2 v.6.0	**(45K segments + more features)**	$525	NEC-2
• EZNEC Pro/4 v.6.0	**(+ requires NEC-4 license)**	$625	NEC-4

NOW (W7EL has retired – there is no "official" support)

…lots of "YouTube's," a groups.io group, and an excellent on-line manual

- **EZNEC Pro/2+ v7.0 - FREE** **NEC-2 / NEC-5 x13 ($110/3-years)**
- **EZNEC Pro/4+** **Free upgrade to Pro/4**

Modeling Antenna Systems – I – NEC-5 vs -2

- **NEC-5** is a proprietary, paid software engine that offers significant improvements in accuracy and capabilities compared to the older, free NEC-2, particularly in handling complex modeling scenarios like **buried conductors, surface patches, certain close-spaced elements, and intensive segmentation requirements.**
- **NEC-5 v. NEC-2**
  - Allows modeling of **buried conductors** and underground radial systems.
  - Calculations converge more slowly, **requiring significantly more segments (2-4x more)** for accurate results, which can increase run time.
  - Permits modeling of elements with **varying diameter sections**
  - Sources are at the **ends of segments (vs. middle)**
  - **Costs $110 (3-year license)**

Modeling Antenna Systems – I – EZNEC Agenda

- The motivation behind my interest in antennas
- NEC: Numerical Electromagnetics Code
- Antenna Modeling Software
- **EZNEC**
  - **EZNEC Intro**
  - **Modeling a 40M dipole**
  - **Ground Characteristics**
  - **Example**

EZNEC ~ Main Screen

Extensive HELP

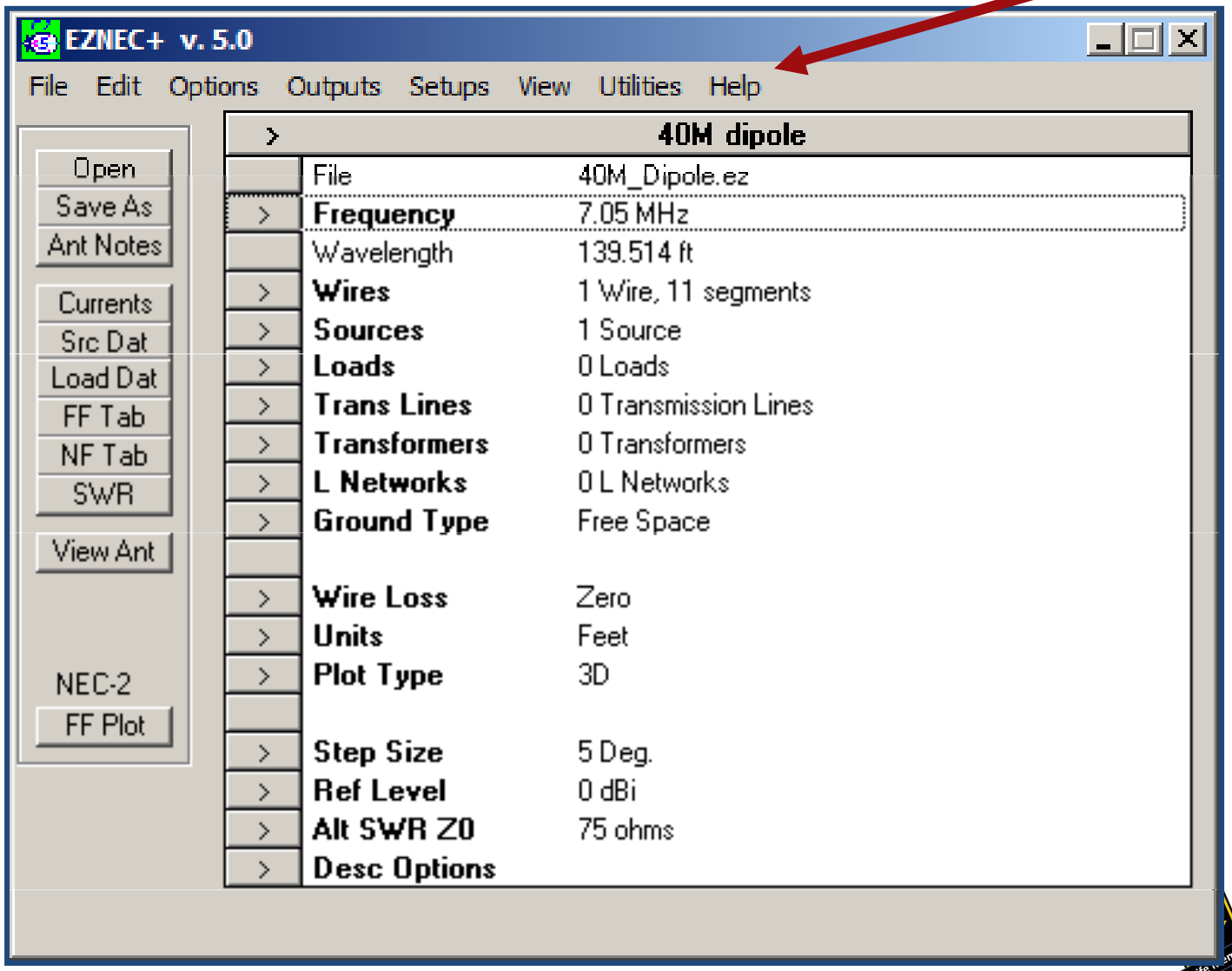

EZNEC Inputs ~ 40M dipole @ 7.05 MHz @ 18’

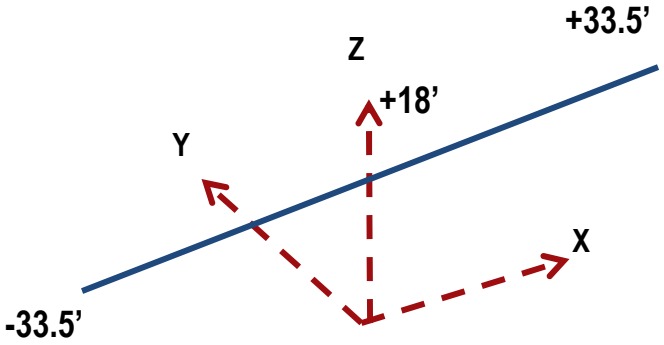

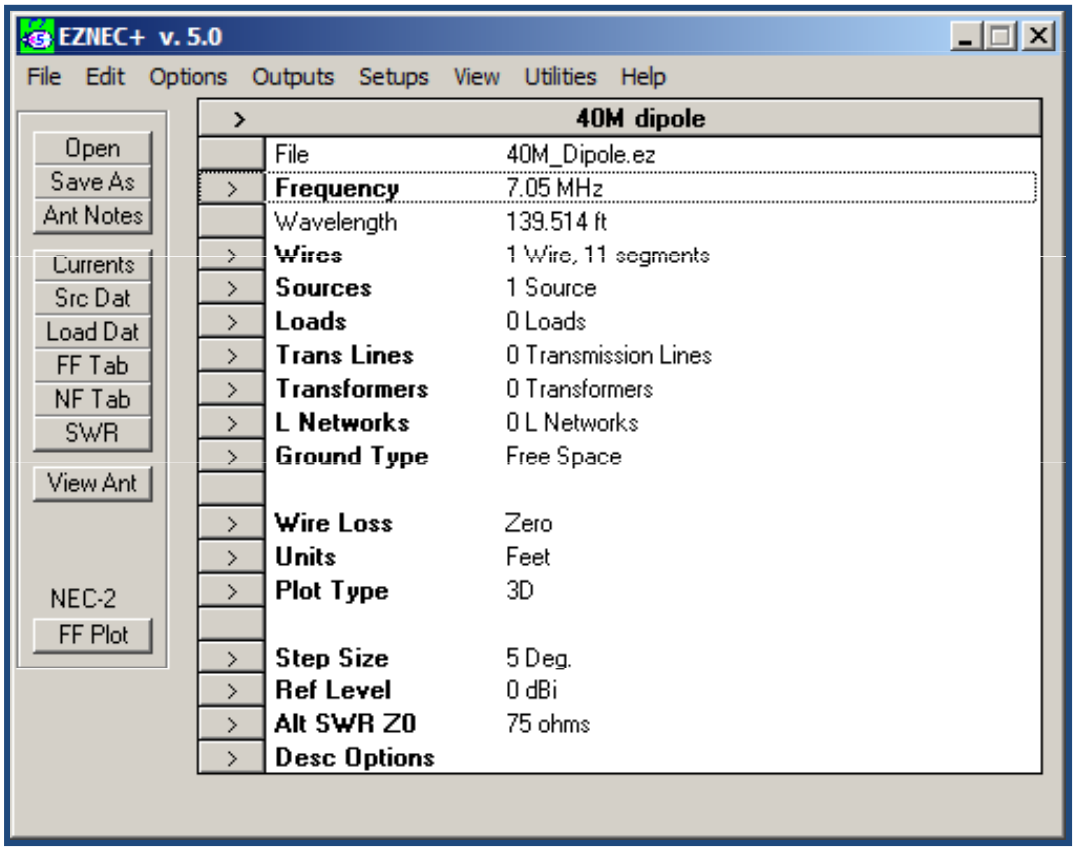

The “usual” equation

➔ L = 468 / F

➔ 468 / 7.05 MHz.

➔ ~66.38 ft ➔

67 ft ➔ 33.5 ft/side

EZNEC Inputs ~ 40M dipole @ 7.05 MHz

First: In Free Space

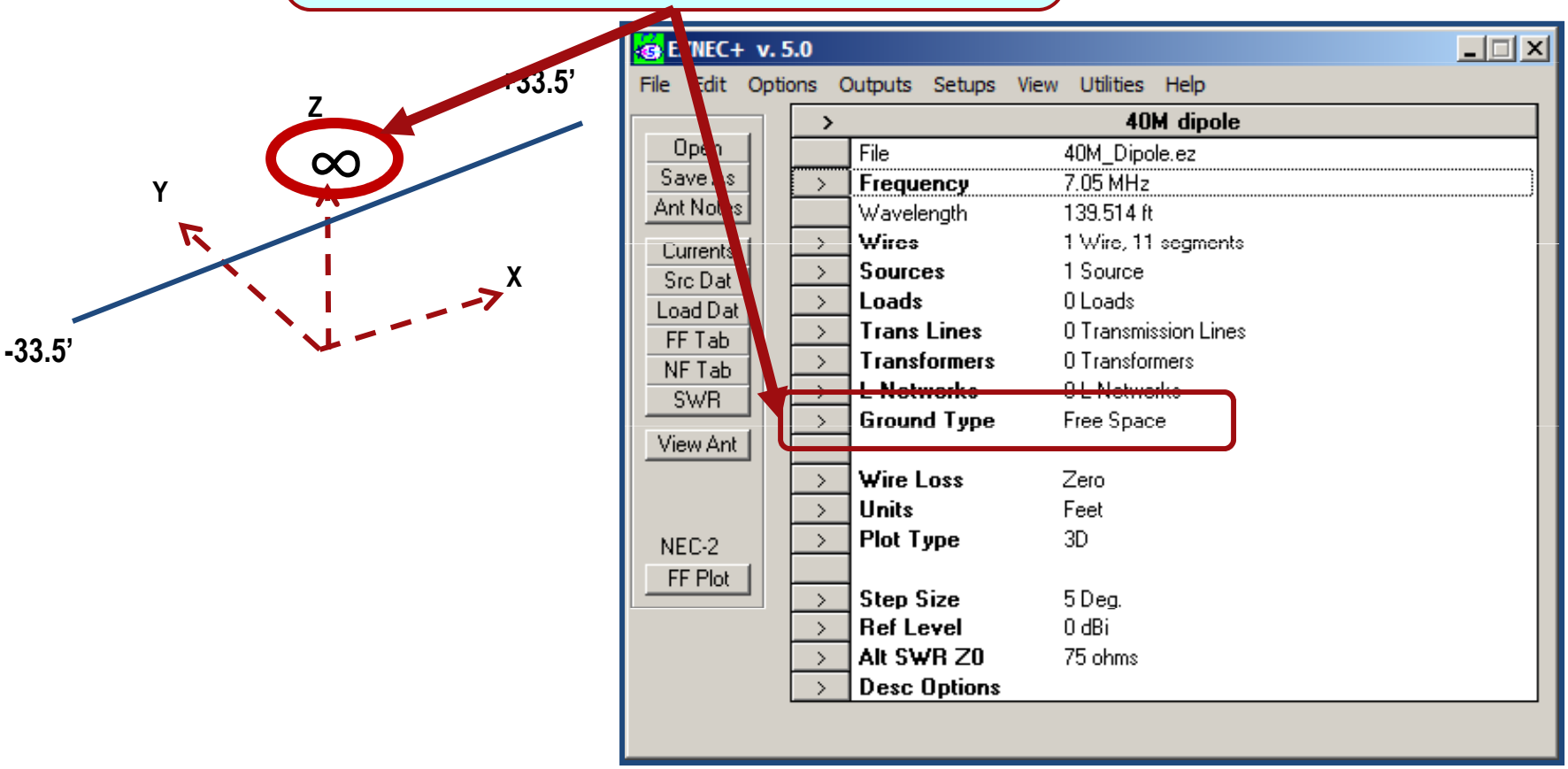

EZNEC Inputs ~ 40M dipole: Wires

Start by entering the antenna dimensions in Cartesian Coordinates

EZNEC+ v. 5.0

File Edit Options Outputs Setups View Utilities Help

Open
Save As
Ant Notes
Currents
Src Dat
Load Dat
NEC-2

	40M dipole
File	40M_Dipole.ez
Frequency	7.05 MHz
Wavelength	139.514 ft
Wires	1 Wire, 11 segments
Sources	1 Source
Loads	0 Loads
Wire Loss	Zero
Units	Feet
Desc Options	

Wires

No.	End 1				End 2				Diameter	Segs
	X (ft)	Y (ft)	Z (ft)	Conn	X (ft)	Y (ft)	Z (ft)	Conn	(in)	
1	-33.5	0	18		33.5	0	18		#12	11

NEC-2

Standard dipole: use 11 segments

Sources in middle of segment

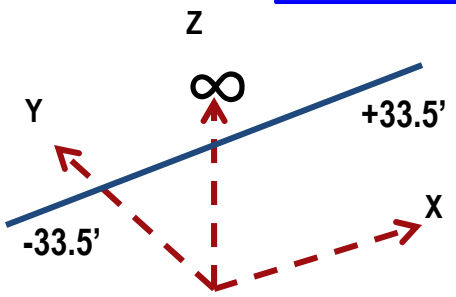

EZNEC Inputs ~ 40M dipole: Wires

Start by entering the antenna dimensions in Cartesian Coordinates

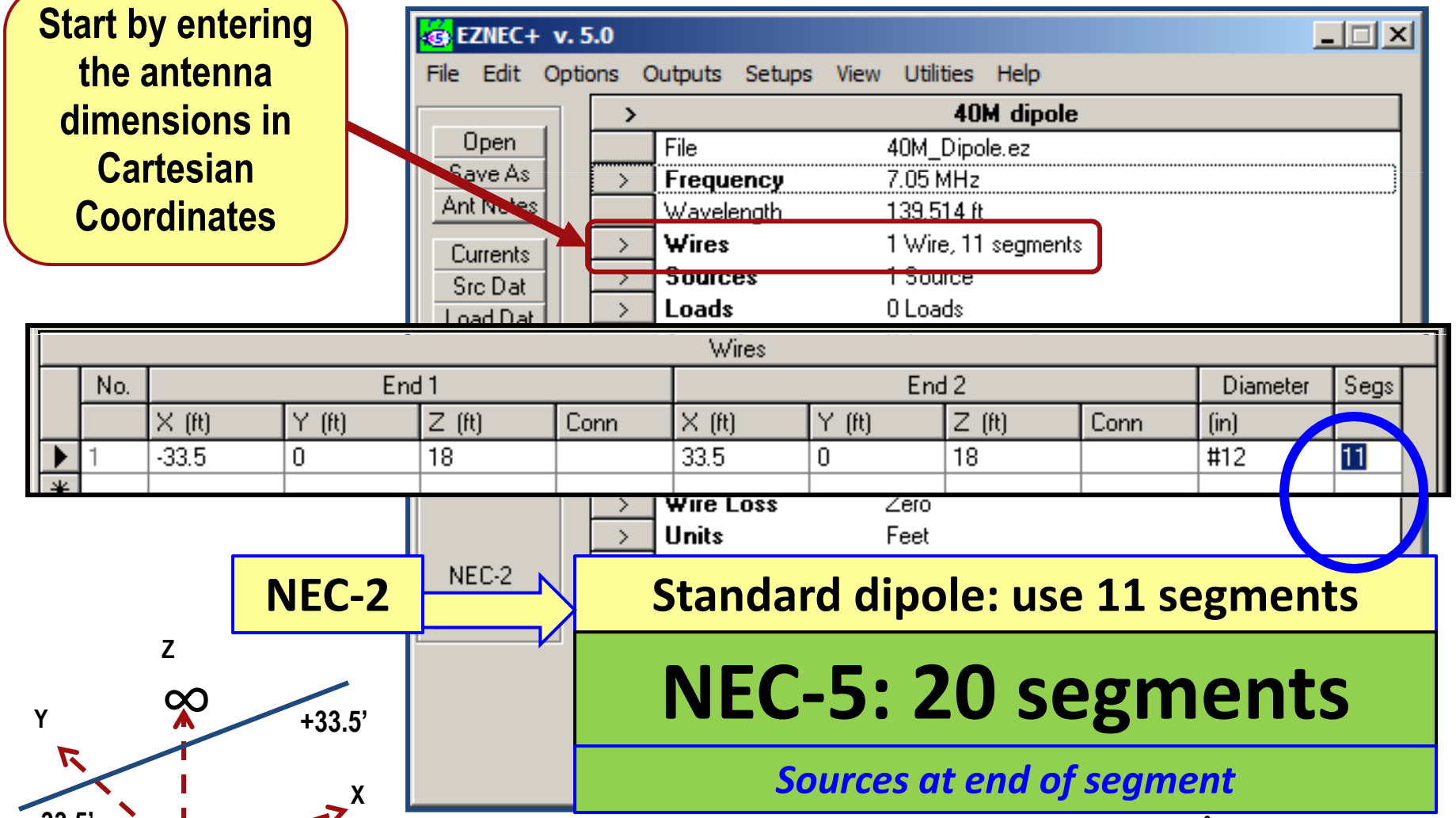

NEC-2

Standard dipole: use 11 segments

NEC-5: 20 segments

Sources at end of segment

EZNEC Inputs ~ 40M dipole: Source

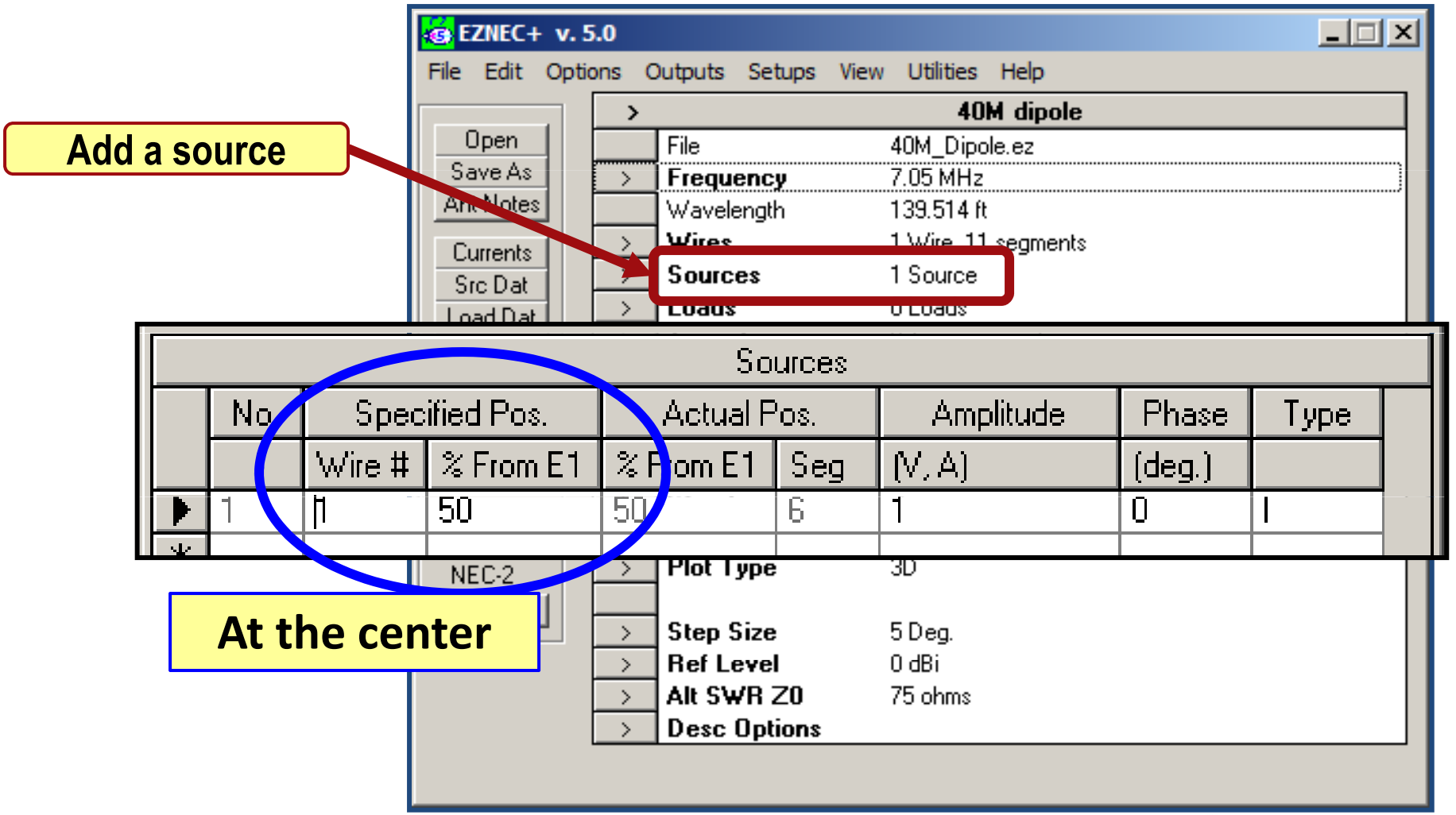

EZNEC Inputs ~ 40M dipole: View Ant

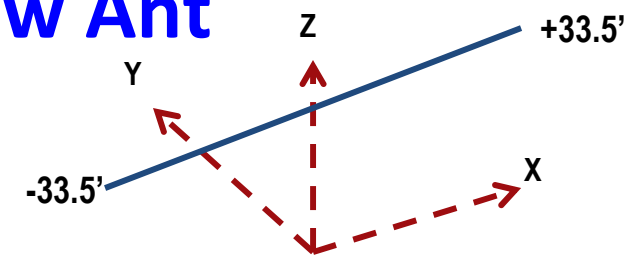

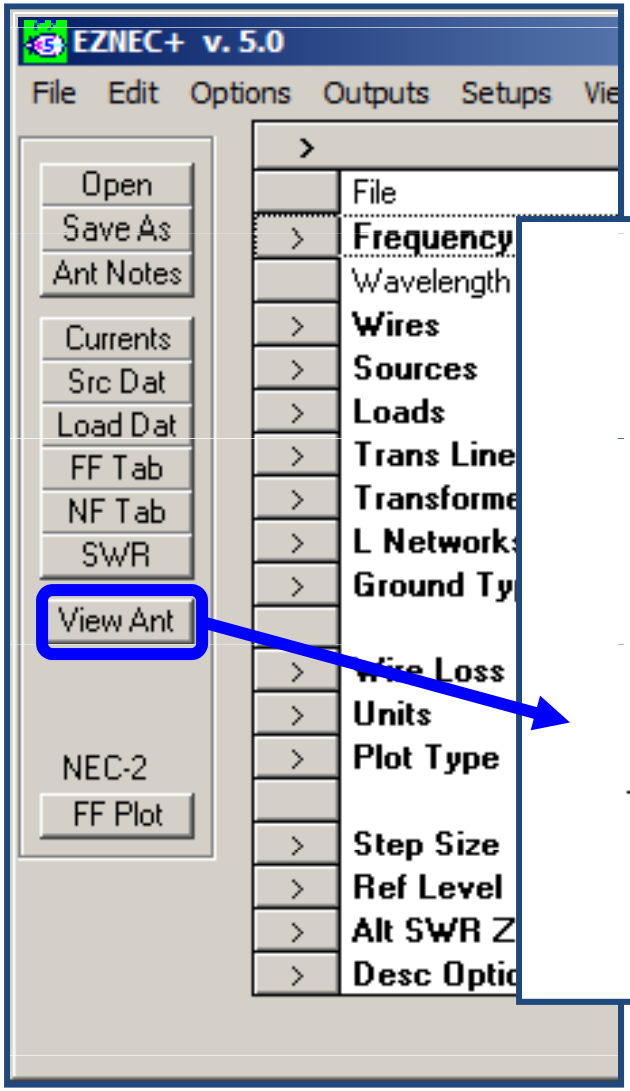

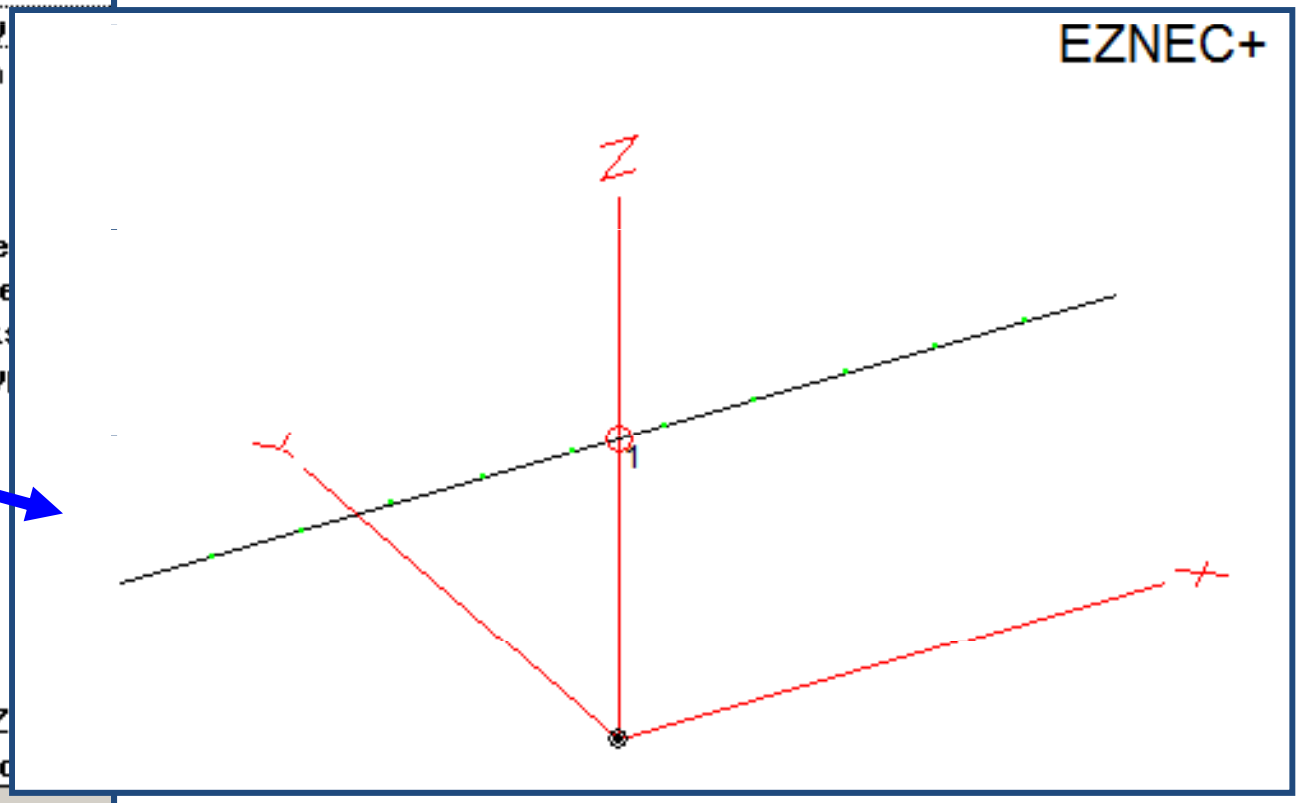

EZNEC Inputs ~ 40M dipole: View Ant

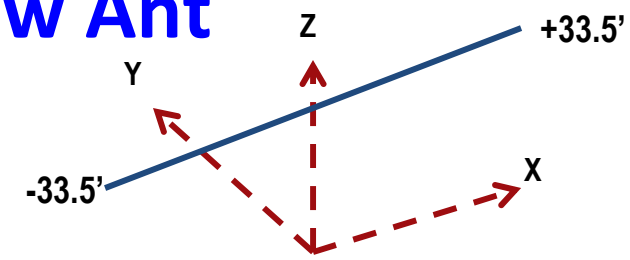

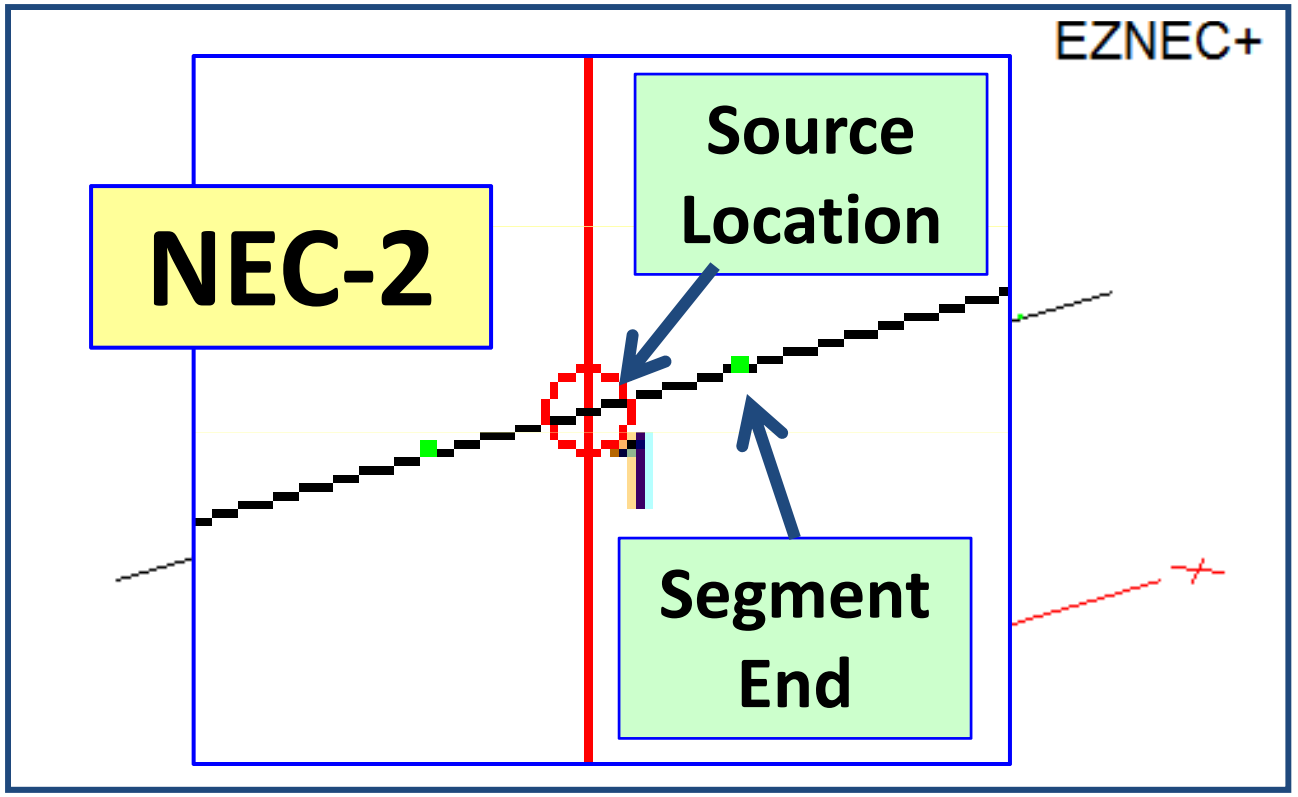

EZNEC Output ~ 40M dipole: SWR

Free Space

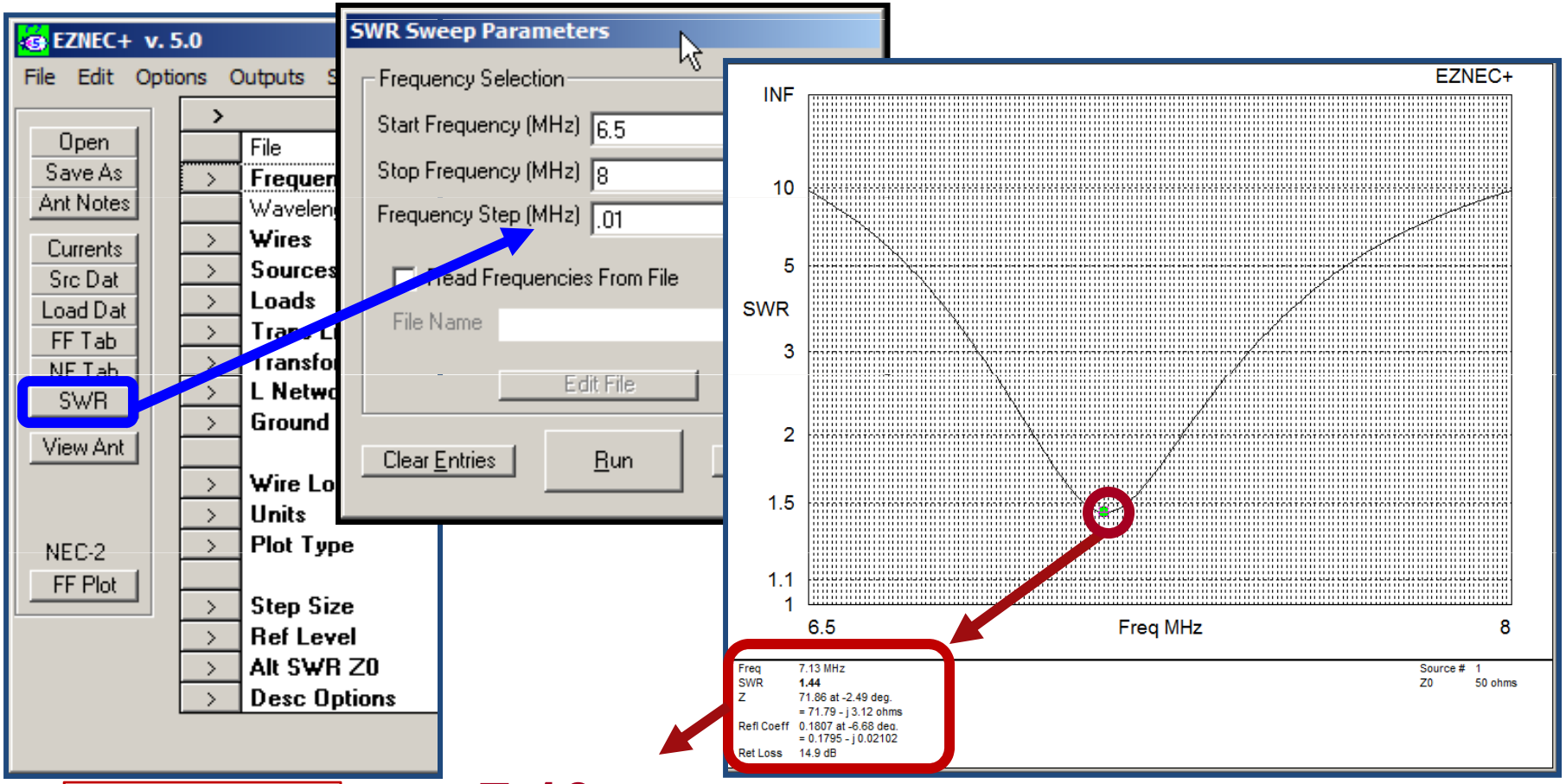

We wanted 7.05 MHz

F = 7.13 MHz

SWR = 1.44:1

Z = 71.79 – j 3.12 Ω

~72 ohms resistive + 3 ohms capacitive

SWR: 72 Ω/50 Ω = 1.44

EZNEC Output ~ 40M dipole → 7.05 MHz

F = 7.13 MHz

SWR = 1.44:1

Z = 71.79 – j 3.12 Ω

→ 7.05 MHz

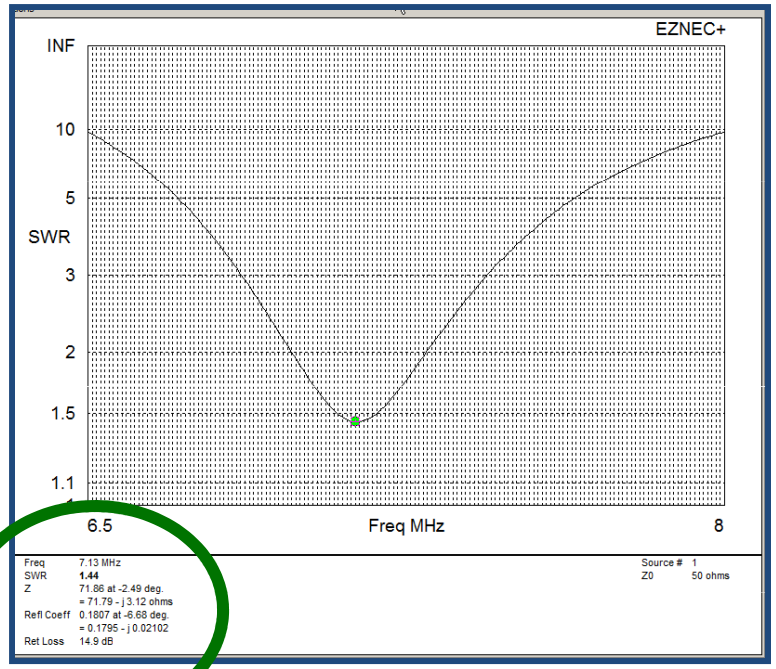

Tweak Length:

F_{OLD} = 7.13 MHz L_{OLD} = 33.5’

F_{NEW} = 7.05 MHz

$$\frac{L_{NEW}}{L_{OLD}} = \frac{F_{OLD}}{F_{NEW}}$$

L_{NEW} = 33.9’ → enter into wires table

→ F = 7.05 MHz

SWR = 1.44:1 Z = 71.9 – j 2.243

EZNEC Output ~ 40M dipole: Far Field Pattern

Set Frequency = 7.05 MHz.

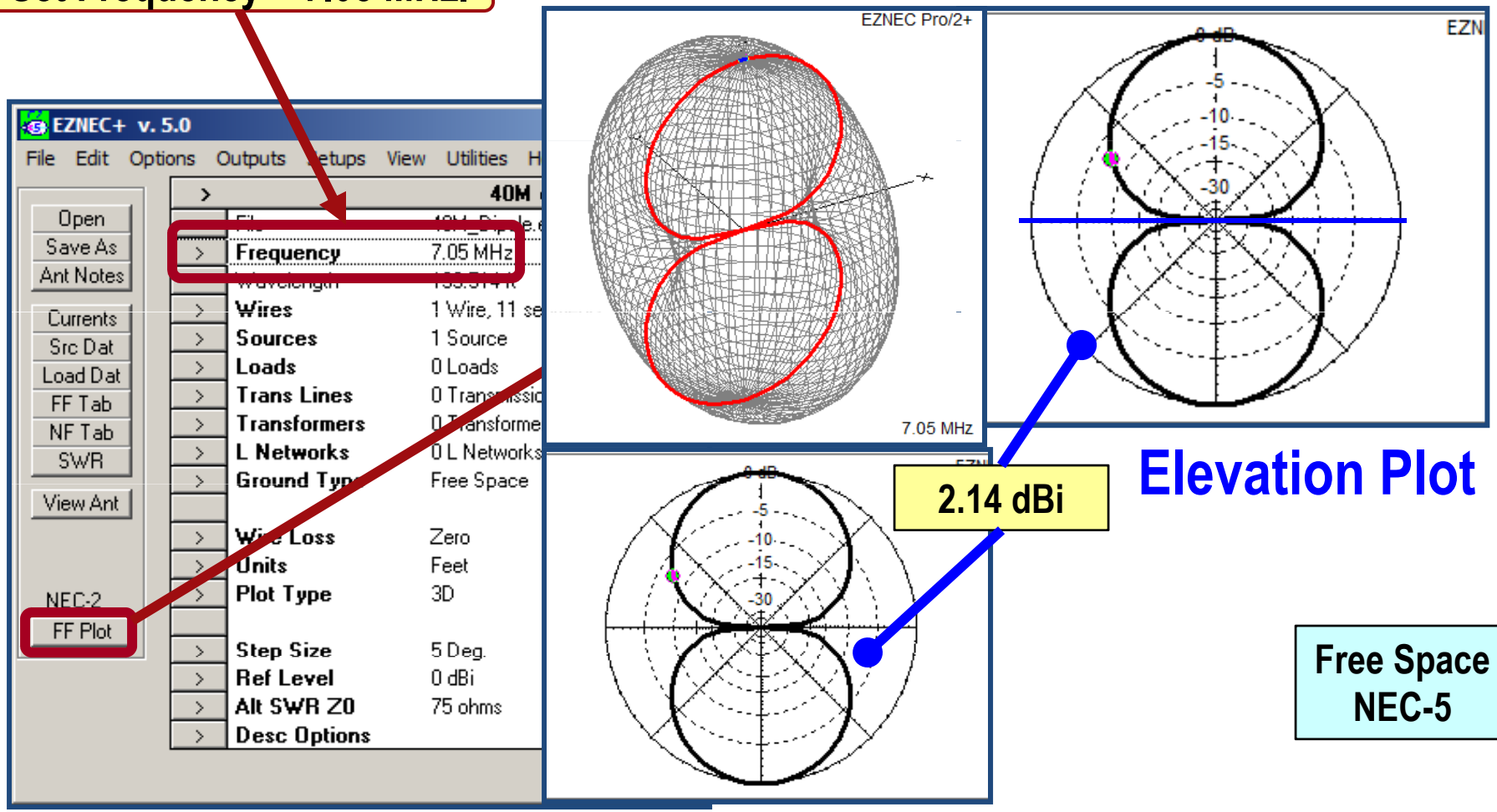

EZNEC Output ~ 40M dipole: RF Current (after running FF Plot)

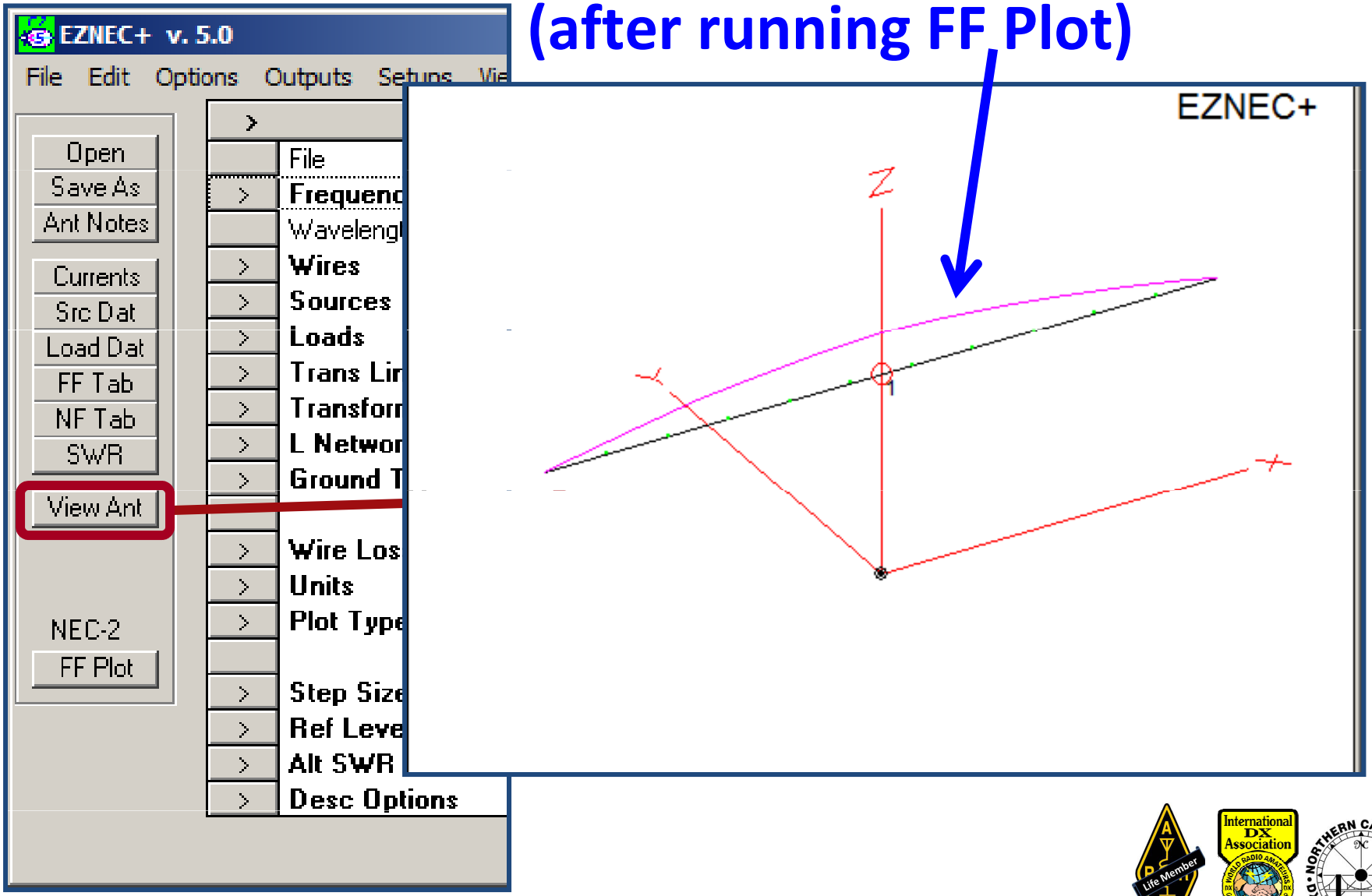

EZNEC Output ~ 40M dipole @ 15M?

Free Space
NEC-5

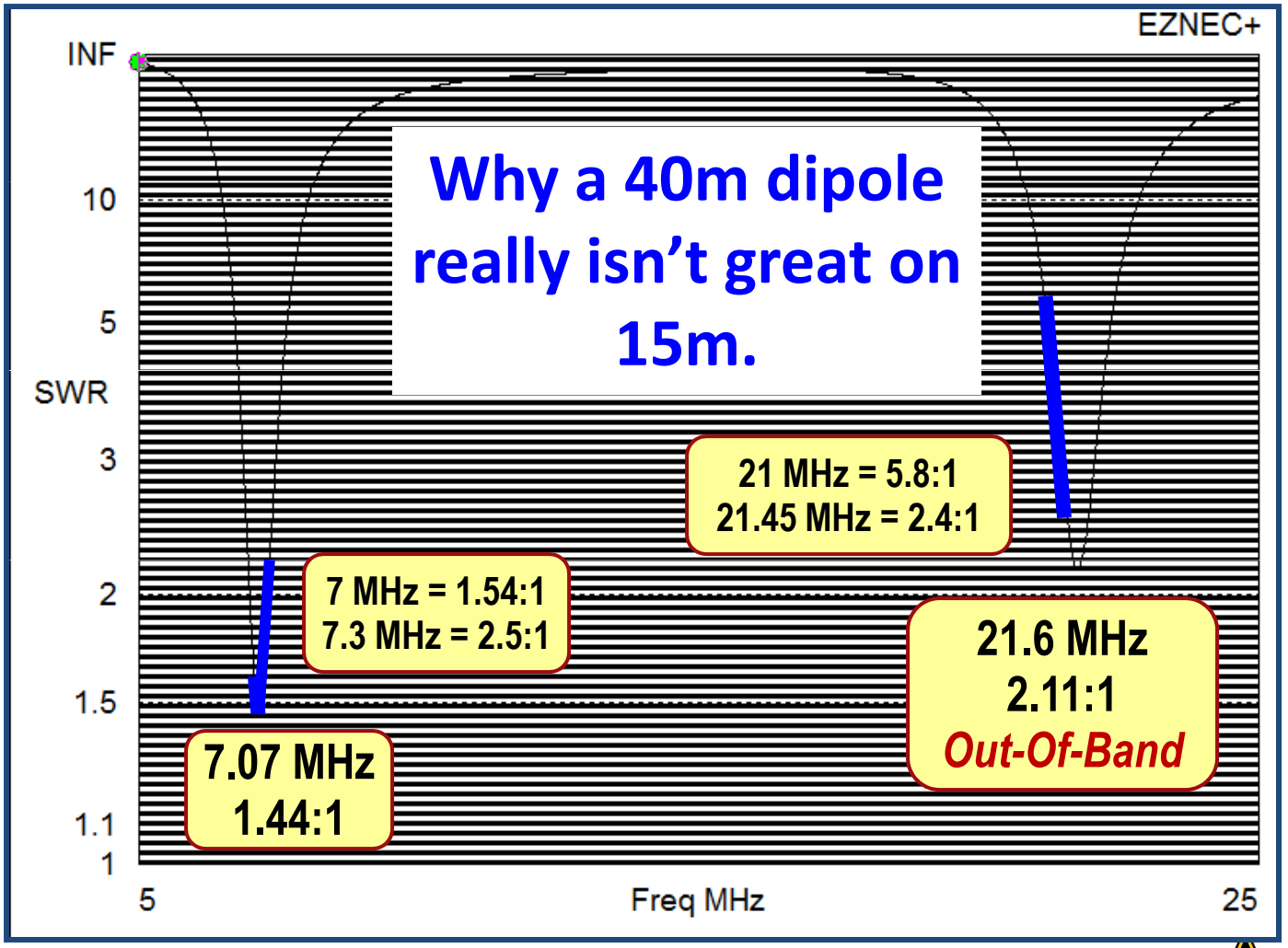

EZNEC Output ~ 40M dipole → 21.1 MHz

Free Space

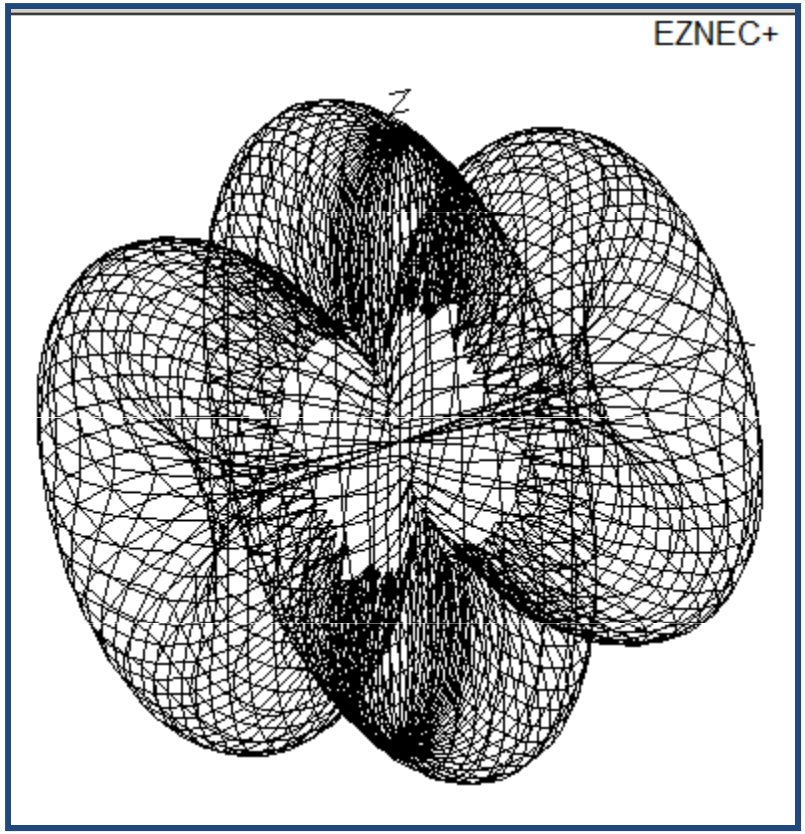

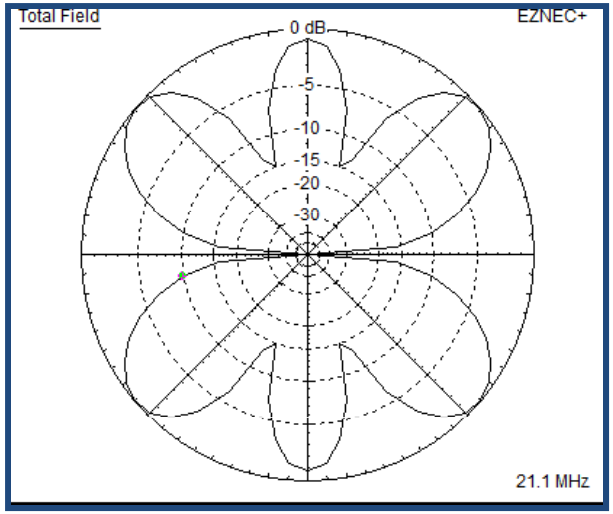

Elevation Plot

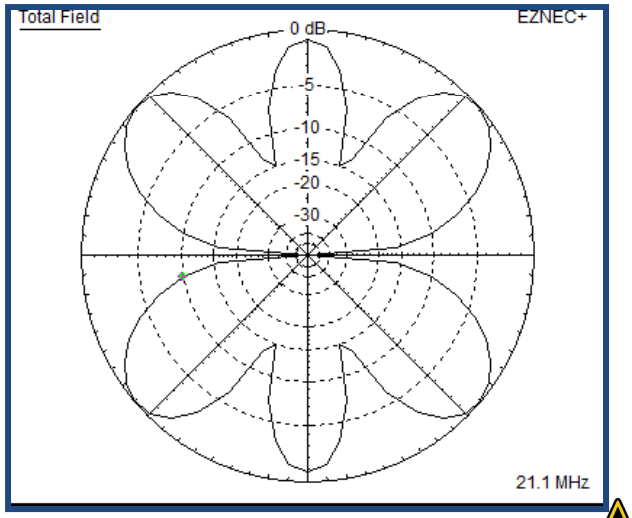

Azimuth Plot

Far Field Pattern has Three Lobes

EZNEC Output ~ 40M dipole → 21.1 MHz

Free Space

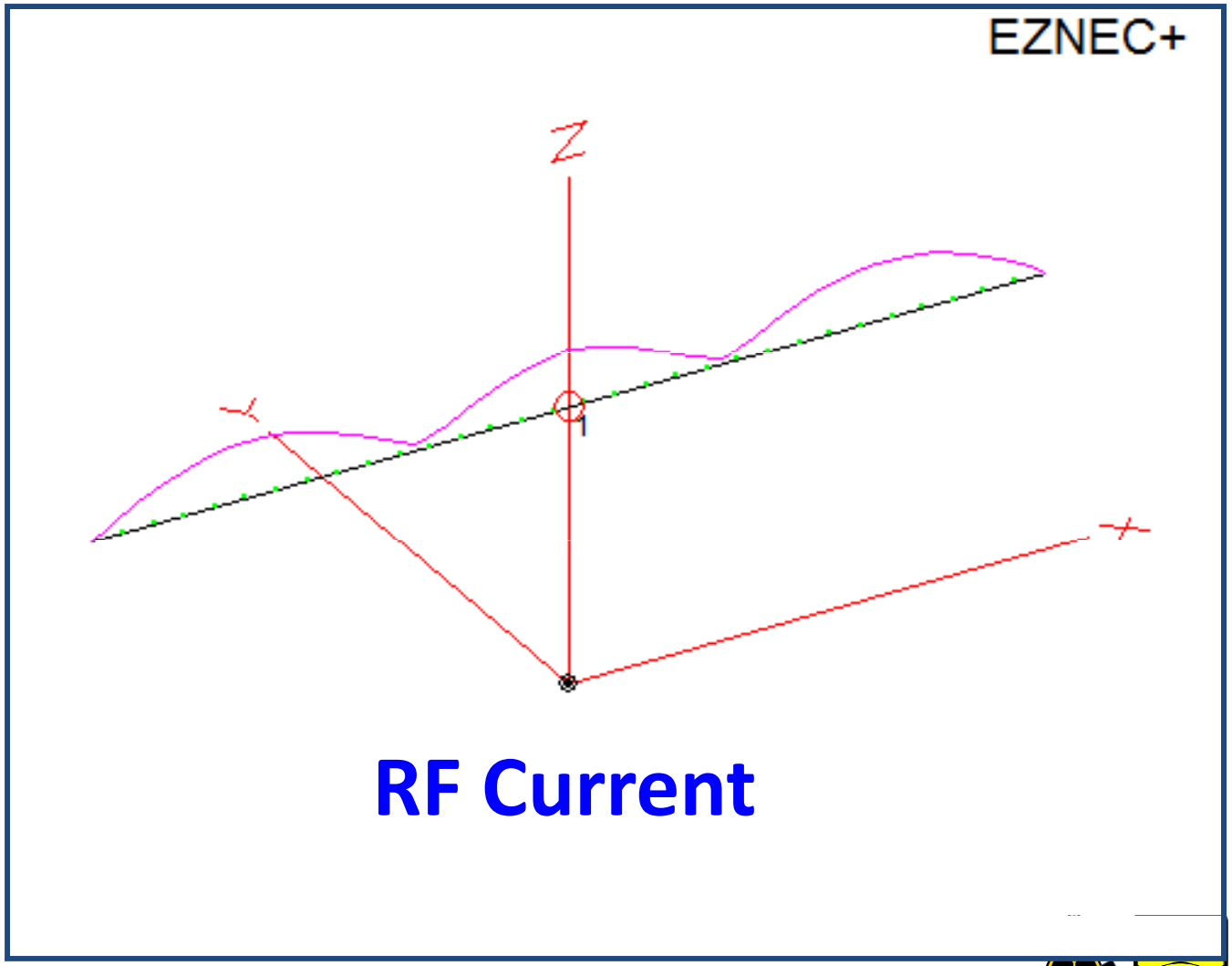

RF Current

EZNEC Output ~ 40M dipole → 21.1 MHz

Free Space

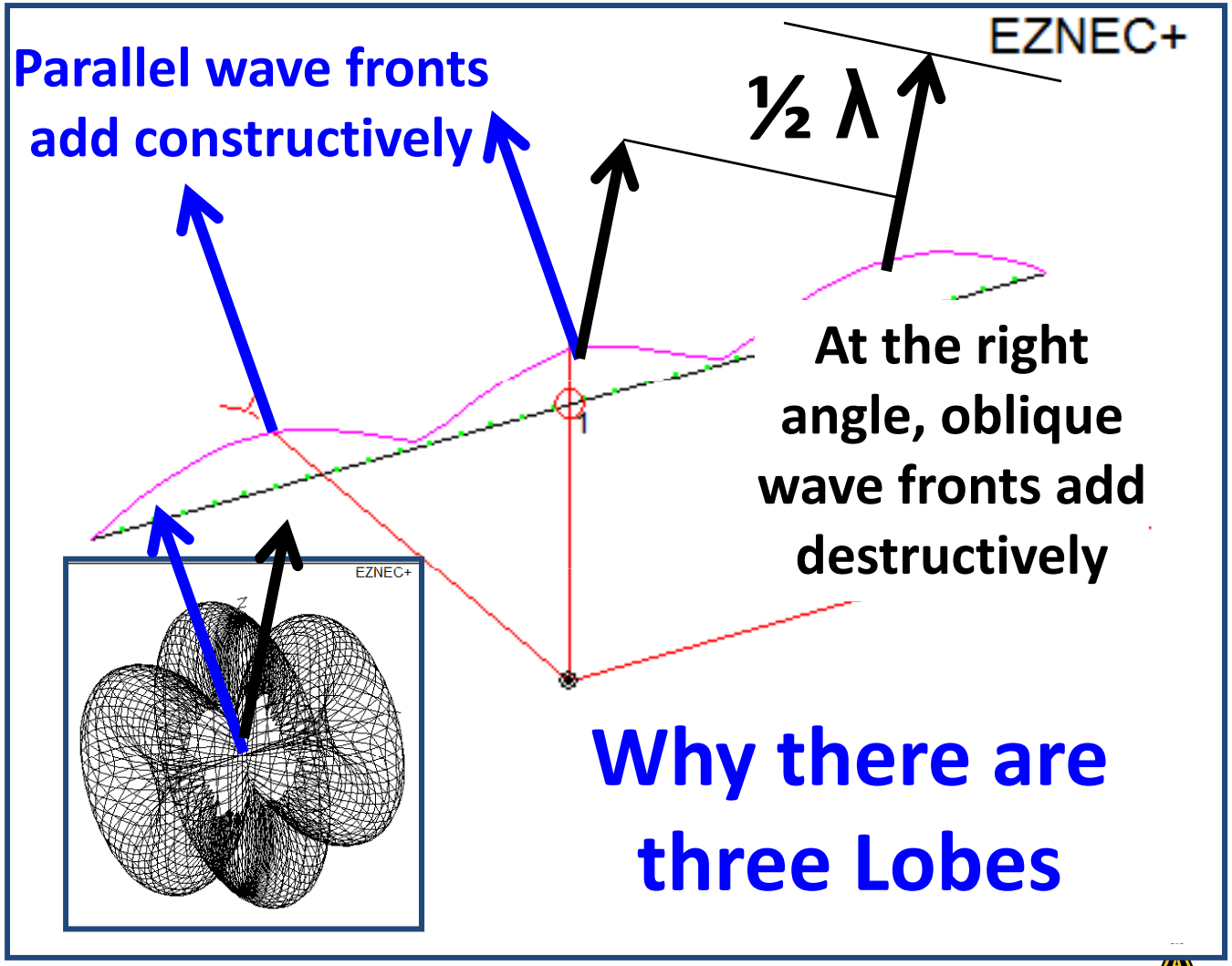

Modeling Antenna Systems – I – EZNEC Agenda

- The motivation behind my interest in antennas
- NEC: Numerical Electromagnetics Code
- Antenna Modeling Software
- **EZNEC**
  - **EZNEC Intro**
  - **Modeling a 40M dipole**
  - **Ground Characteristics**
  - **Example**

EZNEC inputs: Ground Characteristics

So far, this has been in "Free Space" – which doesn't exist here on earth.

Click on *Ground Type*

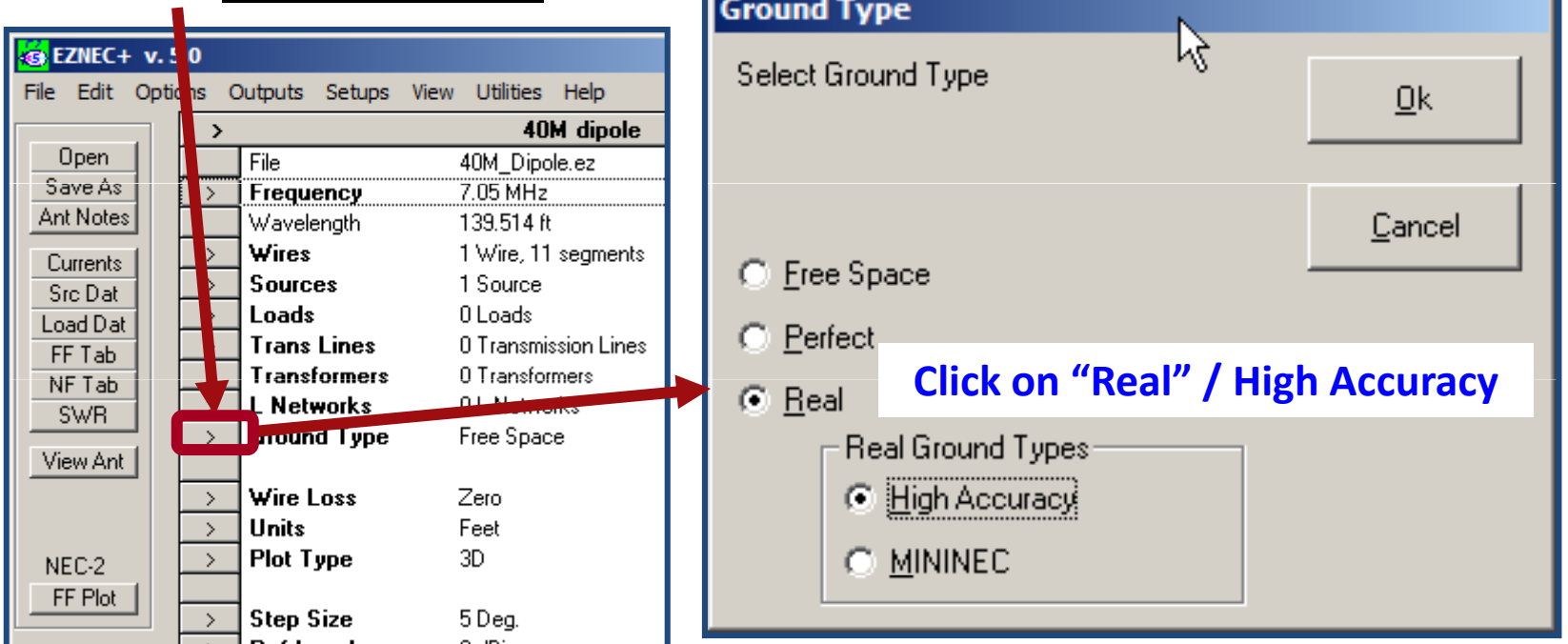

EZNEC inputs: Ground Characteristics

Choices change… …to the default

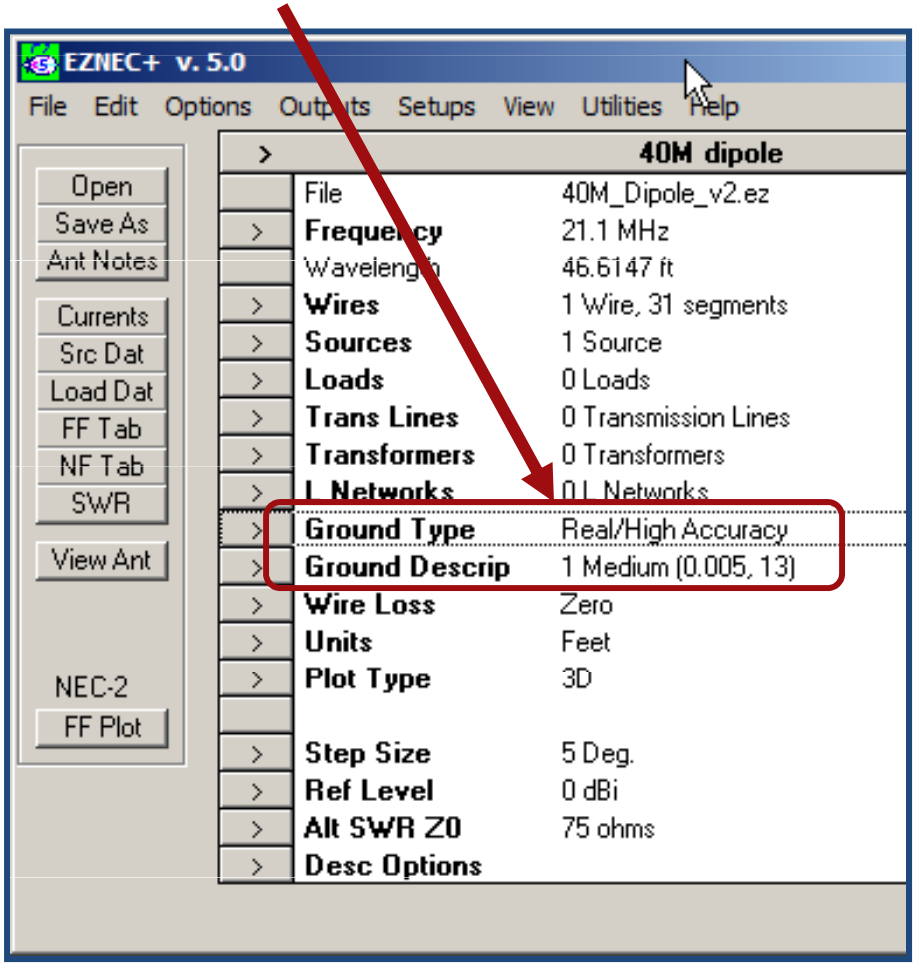

EZNEC inputs: Ground Characteristics

Choices change… Click on *Options* ➔ *Default Ground Construction*

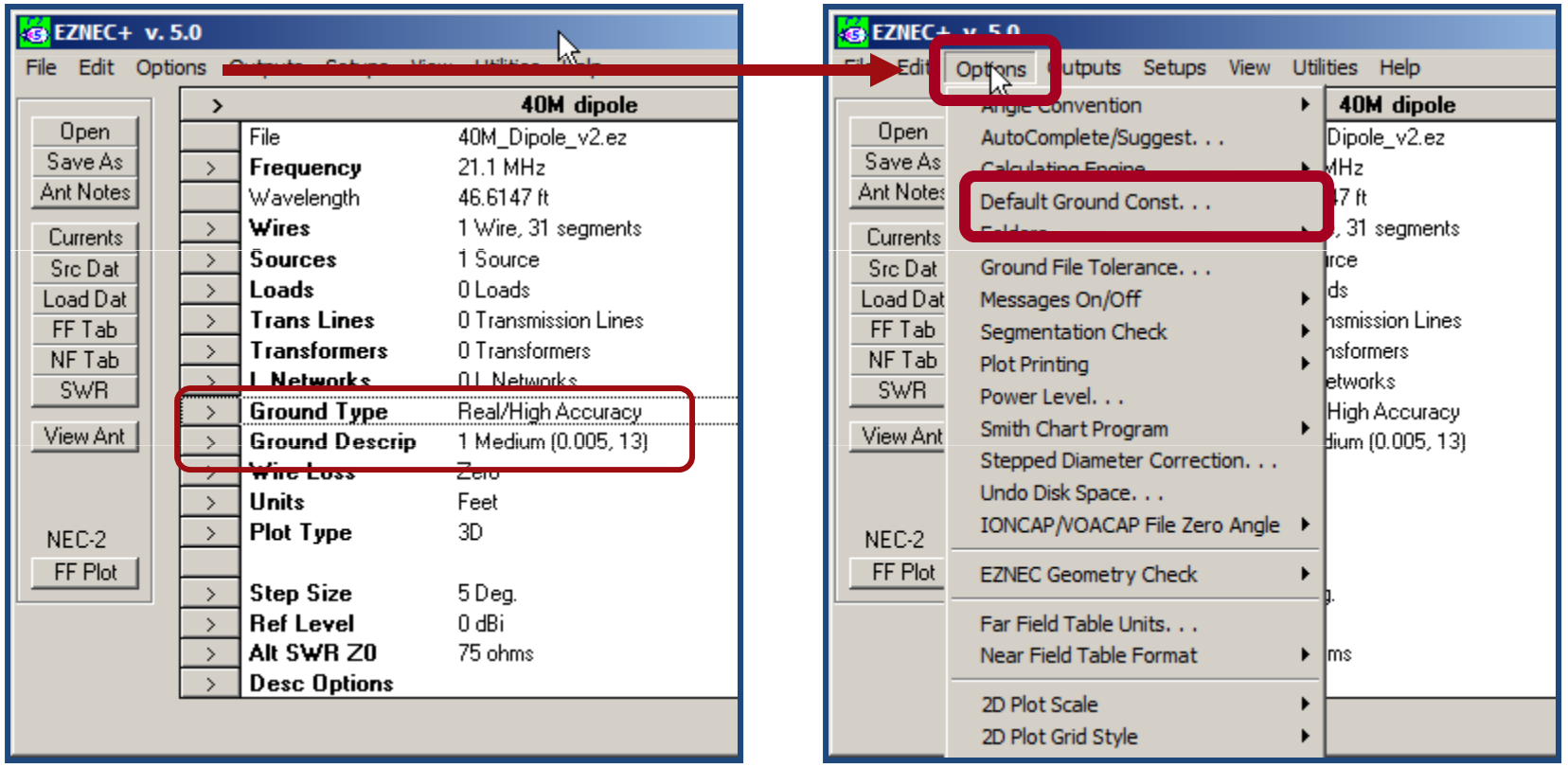

EZNEC inputs: Ground Characteristics

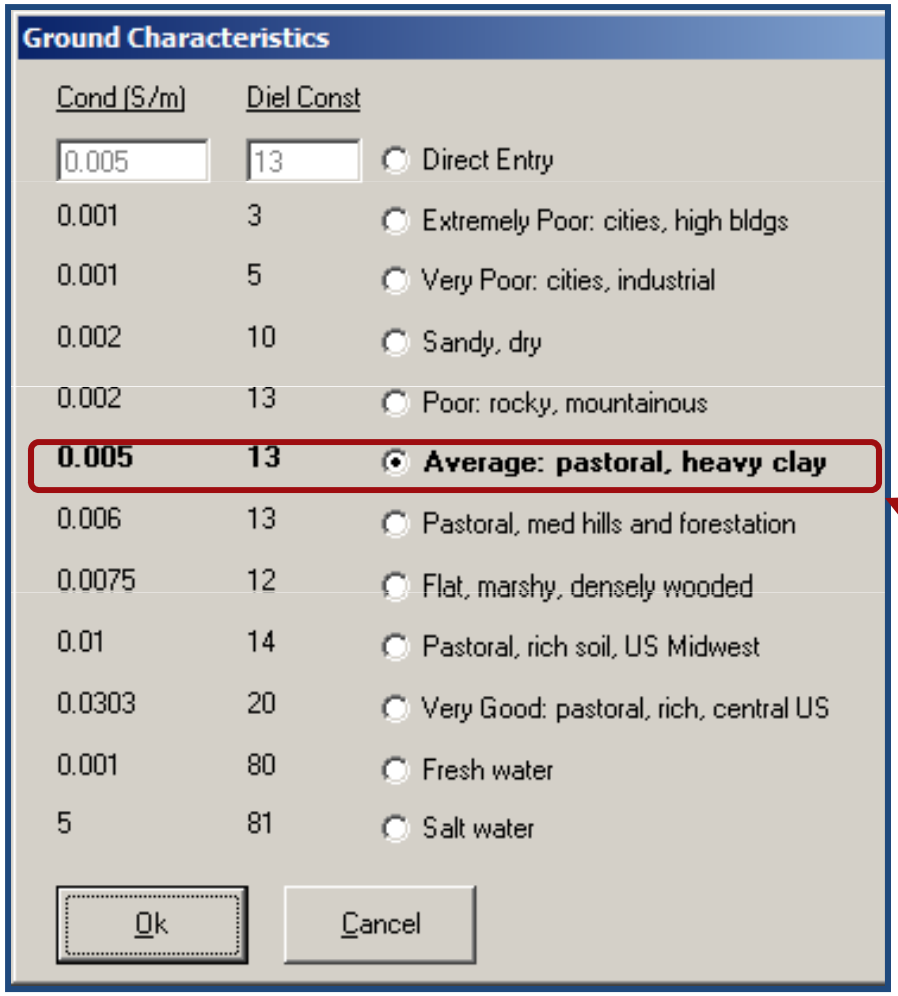

What you see in most QST articles

EZNEC inputs: Ground Characteristics

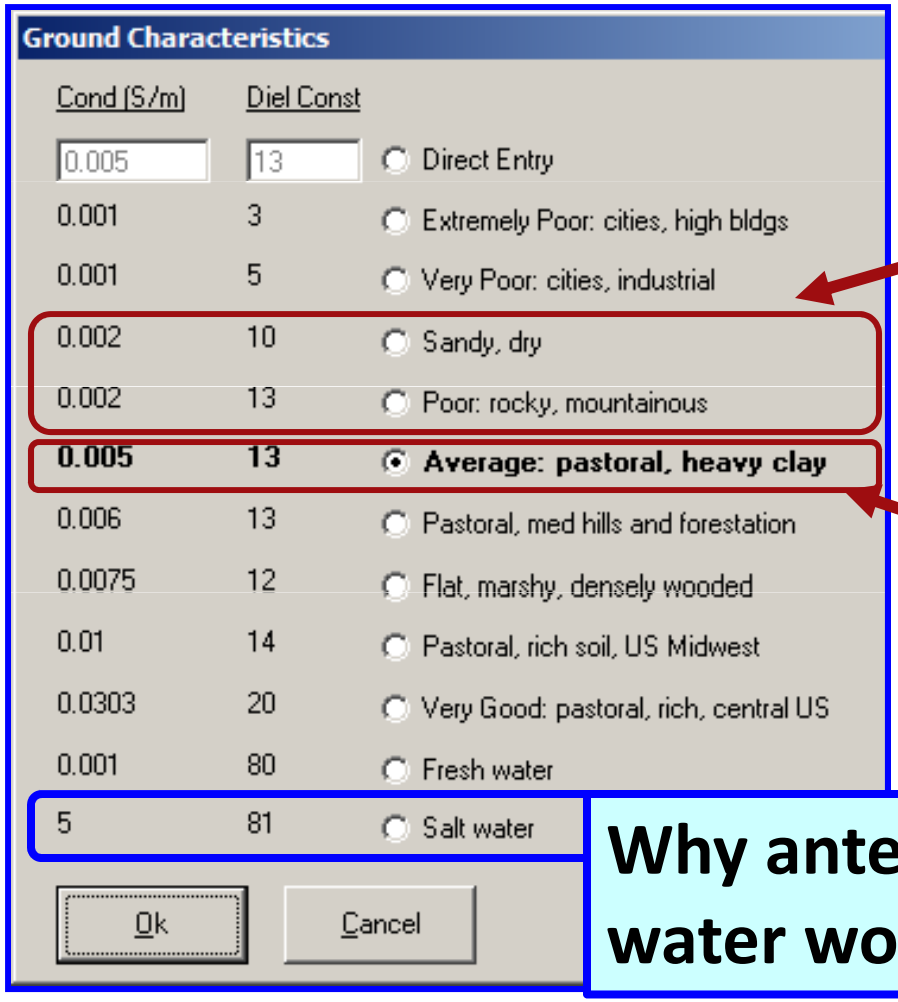

What we are on the New England coast

QST articles

Why antennas near salt water work: ***5 S/m***

Ground Characteristics – Change Ground

NEC-5

Free Space

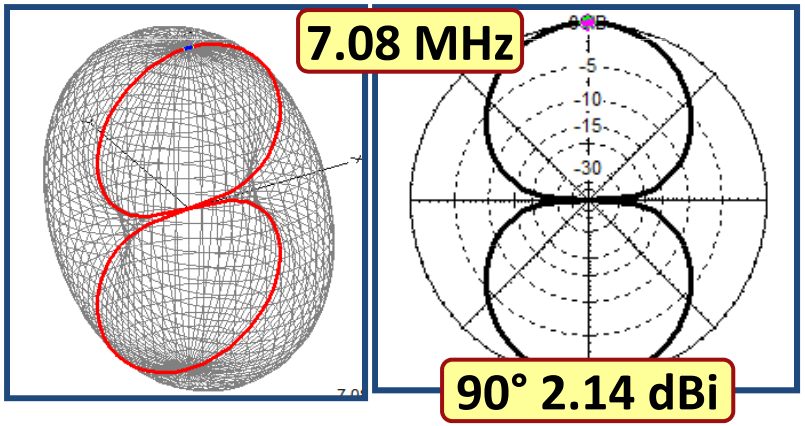

A dipole (0 dBd) = 2.15 dBi

40M dipole in Free Space

Ground Characteristics – Change Ground

NEC-5

Free Space

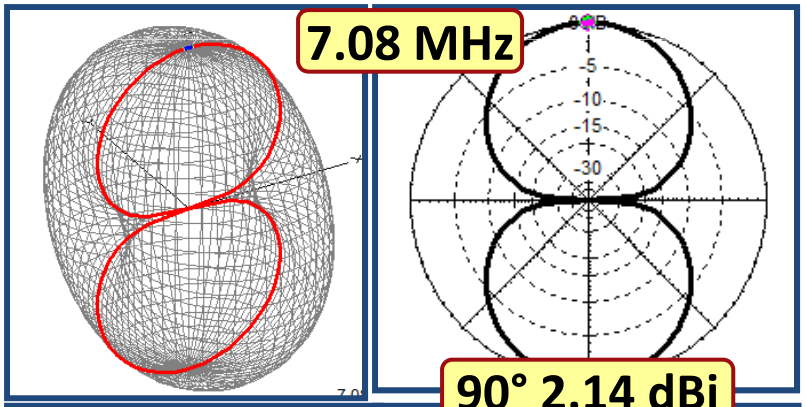

.005 S/m
DC=13
QST

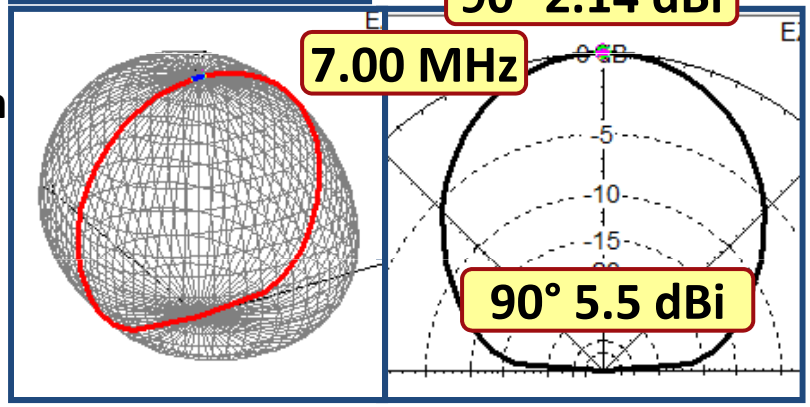

40M dipole at 18’ [~ 3/20 λ]

A 40m dipole @ 18’ is a “cloud warmer”

Ground Characteristics – Change Ground

NEC-5

Free Space

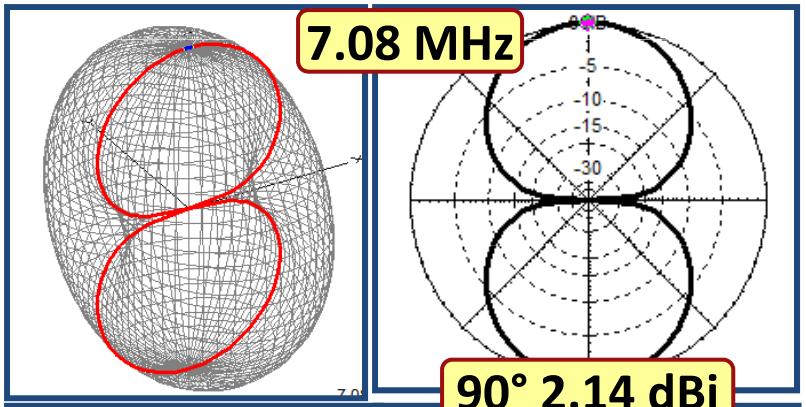

.005 S/m
DC=13
QST

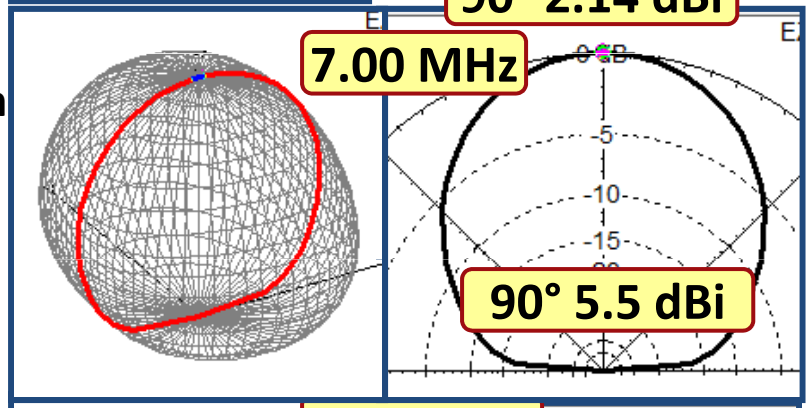

.002 S/m
DC=10
New Eng

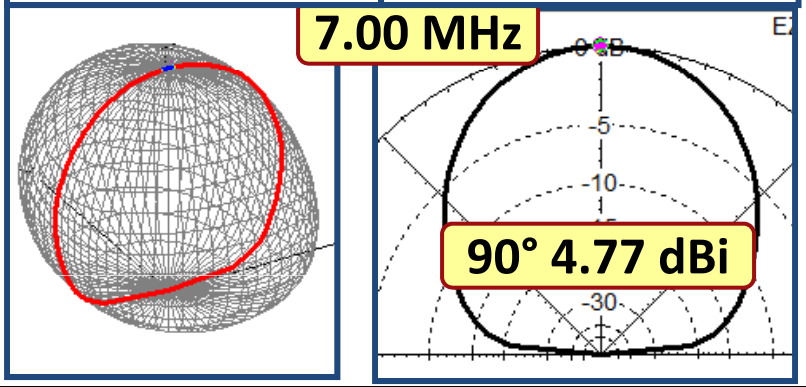

40M dipole at 18’ [~ 3/20 λ]

New England Ground has a bit less gain straight up.

Ground Characteristics – Change Ground

NEC-5

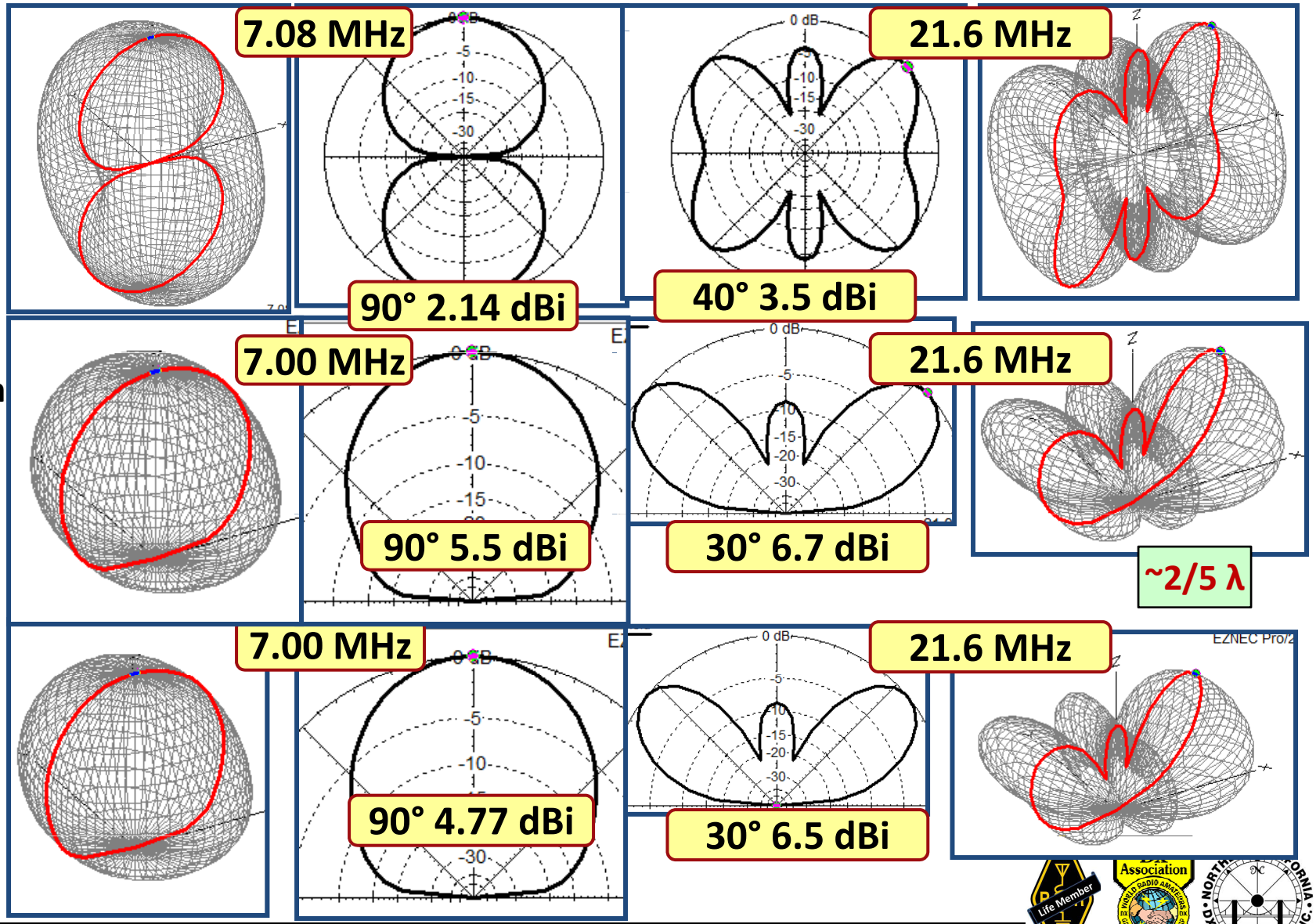

Ground Characteristics – Change Height

NEC-5

18’
.002 S/m
DC=10

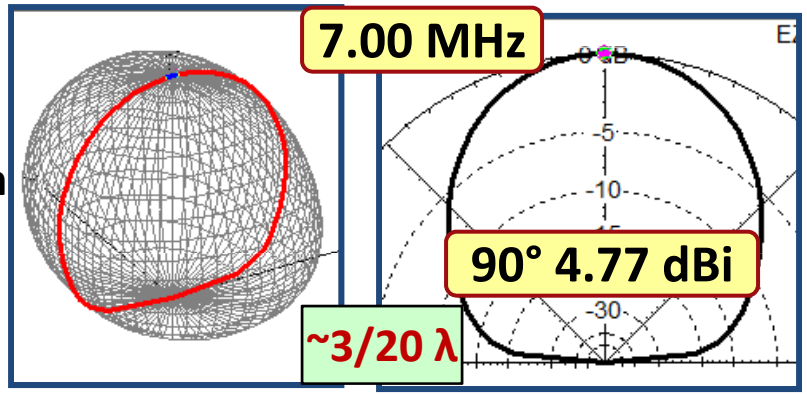

A 40m dipole @ 18’ is a “cloud warmer”

40’
.002 S/m
DC=10

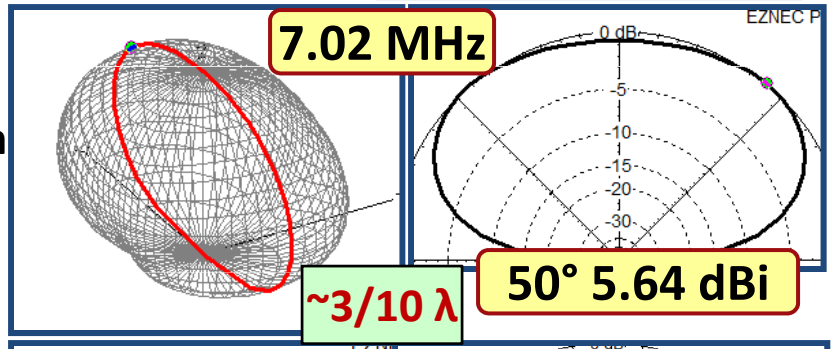

A 40m dipole @ 40’ is a bit better

66’
.002 S/m
DC=10

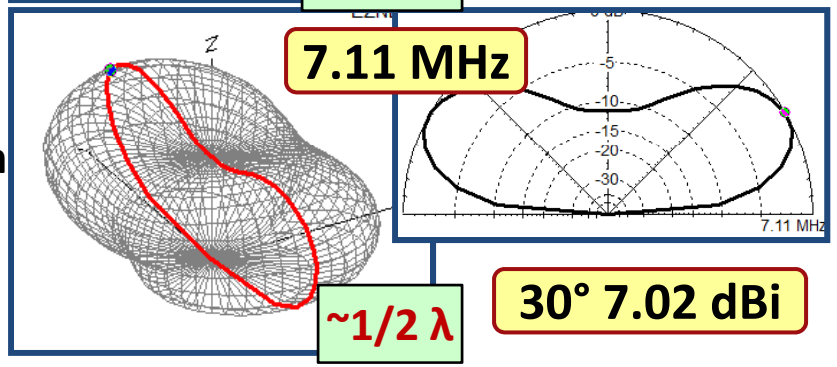

A 40m dipole @ 66’ [0.5 λ] is sort of “optimum”

Ground Characteristics – Change Height

NEC-5

18’
.002 S/m
DC=10

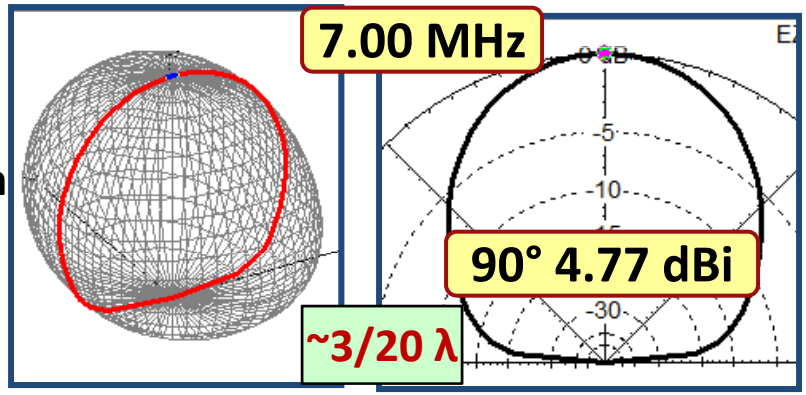

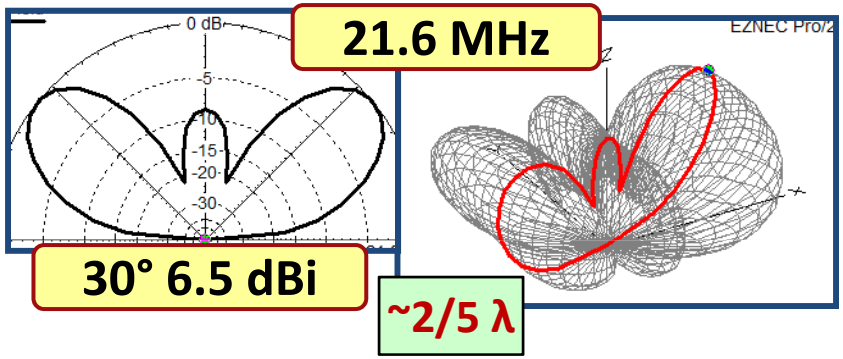

40’
.002 S/m
DC=10

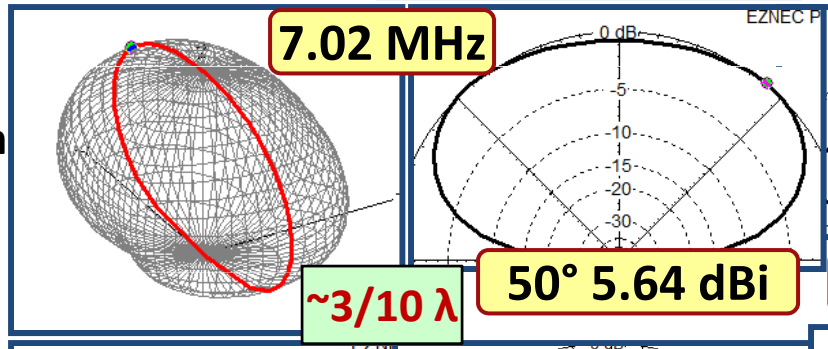

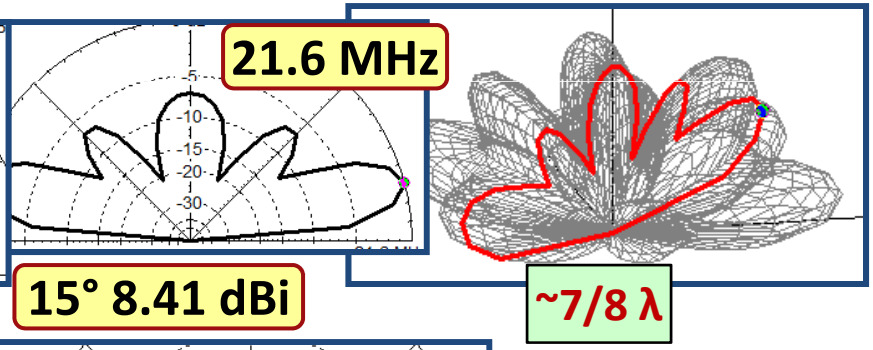

66’
.002 S/m
DC=10

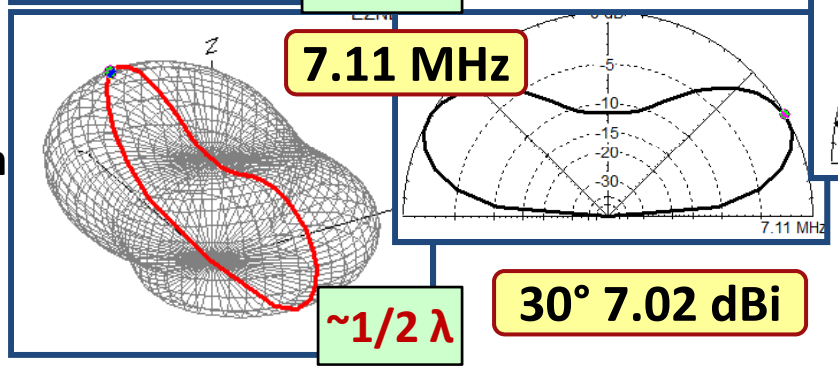

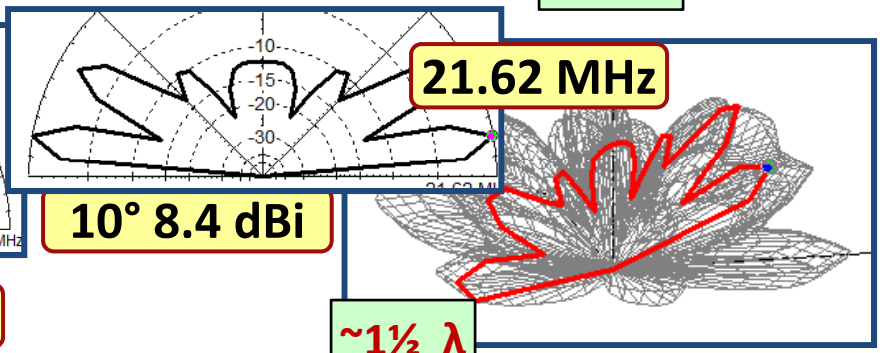

Modeling Antenna Systems – I – EZNEC Agenda

- The motivation behind my interest in antennas
- NEC: Numerical Electromagnetics Code
- Antenna Modeling Software
- **EZNEC**
  - **EZNEC Intro**
  - **Modeling a 40M dipole**
  - **Ground Characteristics**
  - **Example**

EZNEC Example – 40M Vertical [Harpswell, Maine]

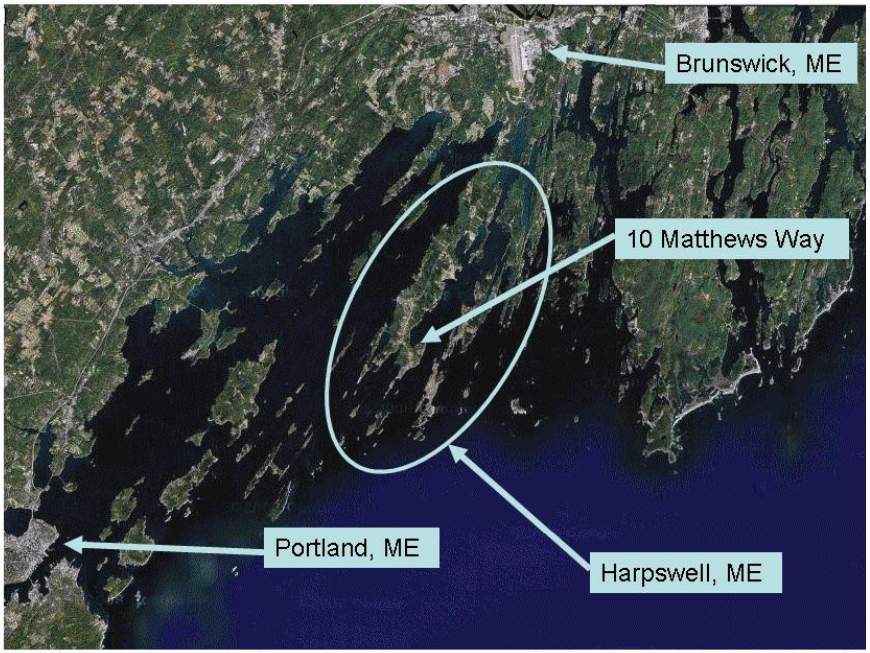



Situation (2010):

- I had DXCC on 10 / 15 / 20 and was working on 40M
- No tall trees ➔ Had a 40M dipole @ 18' high off my house
- What antenna might work better?

EZNEC Example – 40M Vertical [Harpswell, Maine]

Sub-Agenda

- **Original 40m dipole** *[18' high / New England Ground]*
- **A *perfect* dipole** *[½λ high / perfect ground]*
- ***Perfect* dipole vs. *perfect* vertical** *[120 radials / perfect ground]*
- ***Real* dipole vs. *real* vertical** *[New England Ground]*
- **Original dipole vs. real vertical**
- **Choosing the Radials**
- ***The actual vertical***

EZNEC Example – The Original 40M Dipole again

Original 40M dipole: 18' high: assumes ground = 0.002 S/m Diel Const = 10

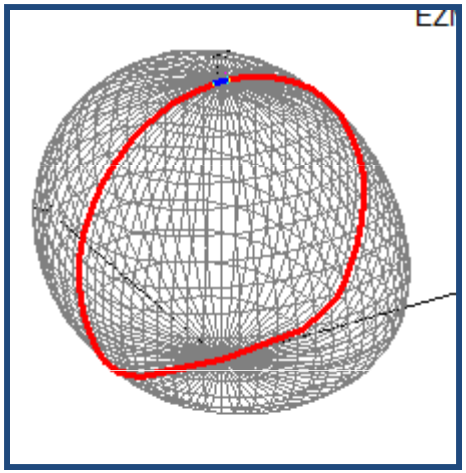

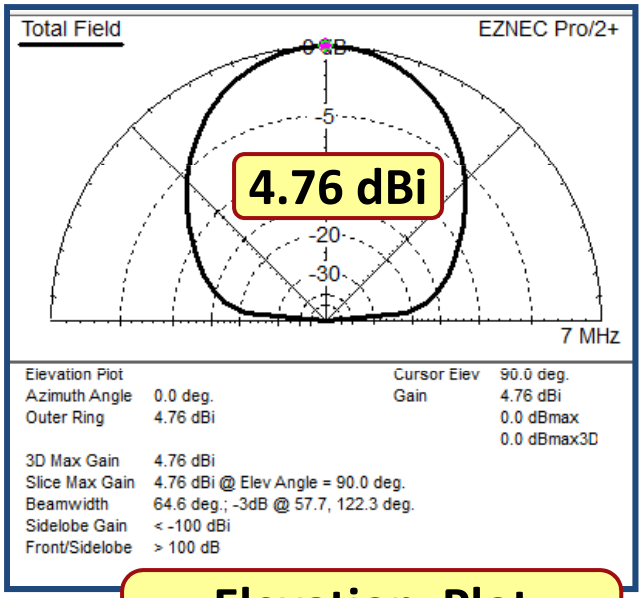

Elevation Plot @ 0° Azimuth

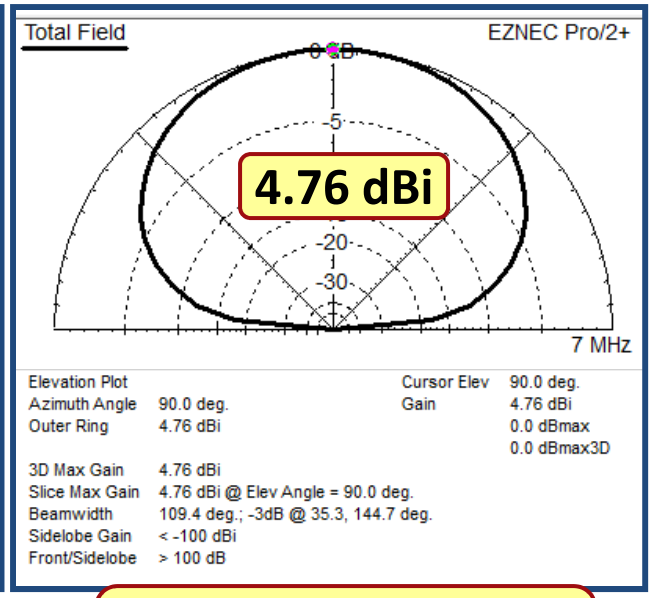

Elevation Plot @ 90° Azimuth

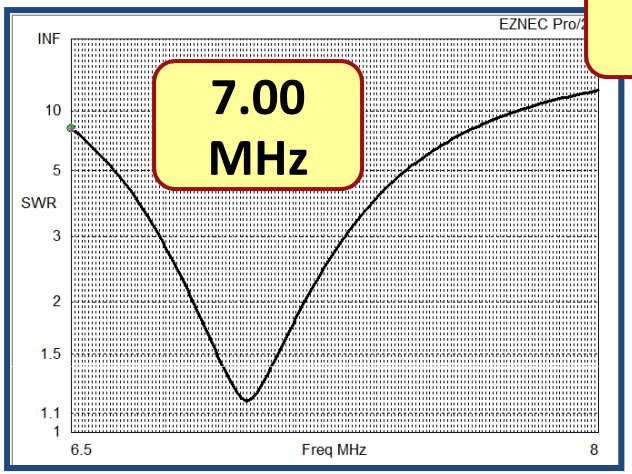

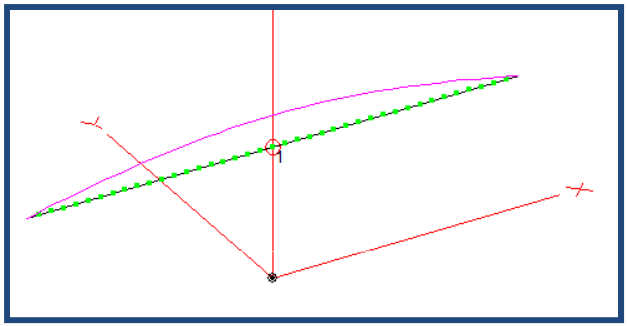

NEC-5

NEC-5

EZNEC Example – A 40M "Perfect Dipole"

"Perfect" Dipole 66' 1/2 λ high Perfect GND

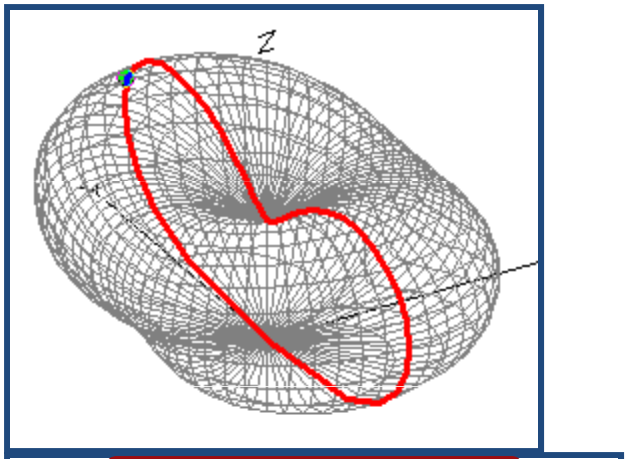

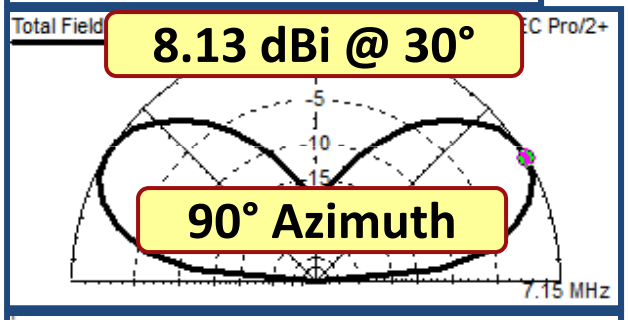

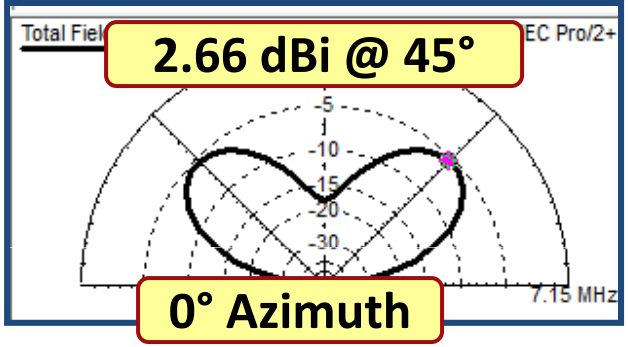

EZNEC Example – "Perfect" Dipole vs. Vertical

"Perfect" Dipole 66' 1/2 λ high Perfect GND "Perfect" Vertical 120 radials

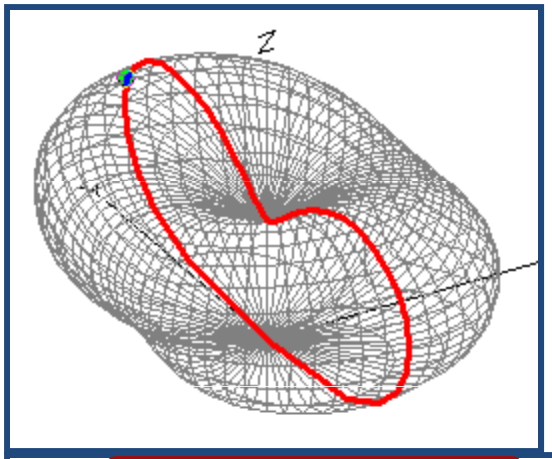

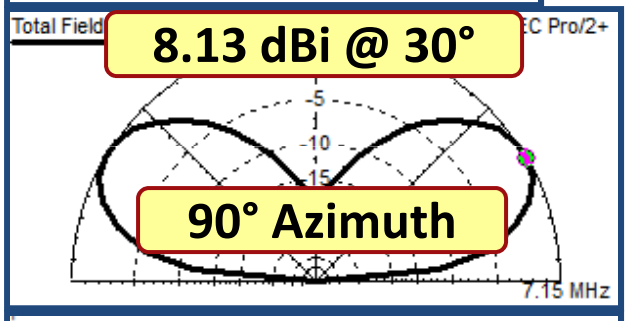

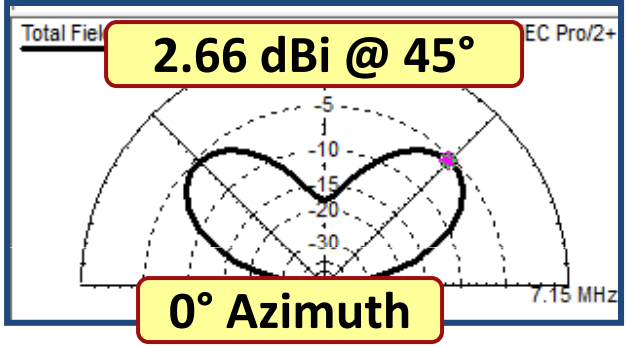

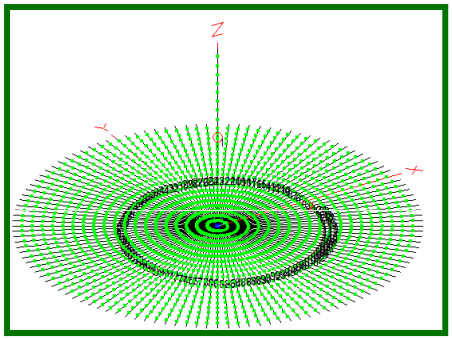

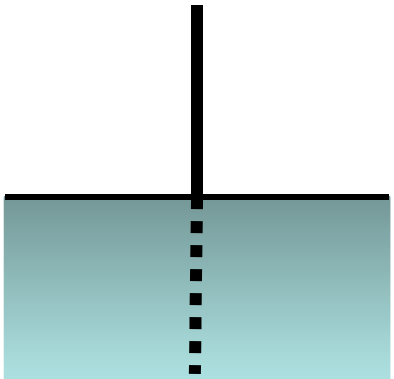

A 1/4λ vertical is half a dipole, with the other half the ground or radial system.

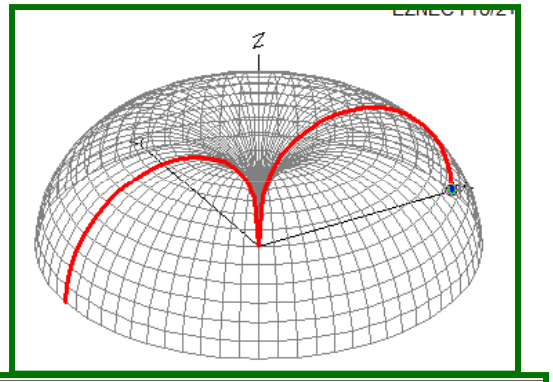

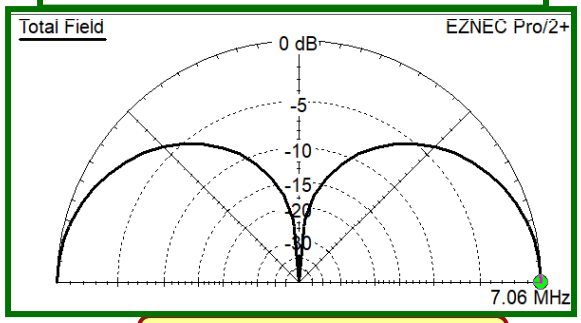

5.15 dBi @ 0°

NEC-5

EZNEC Example – "Perfect" Dipole vs. Vertical

"Perfect" Dipole 66' 1/2 λ high Perfect GND "Perfect" Vertical 120 radials

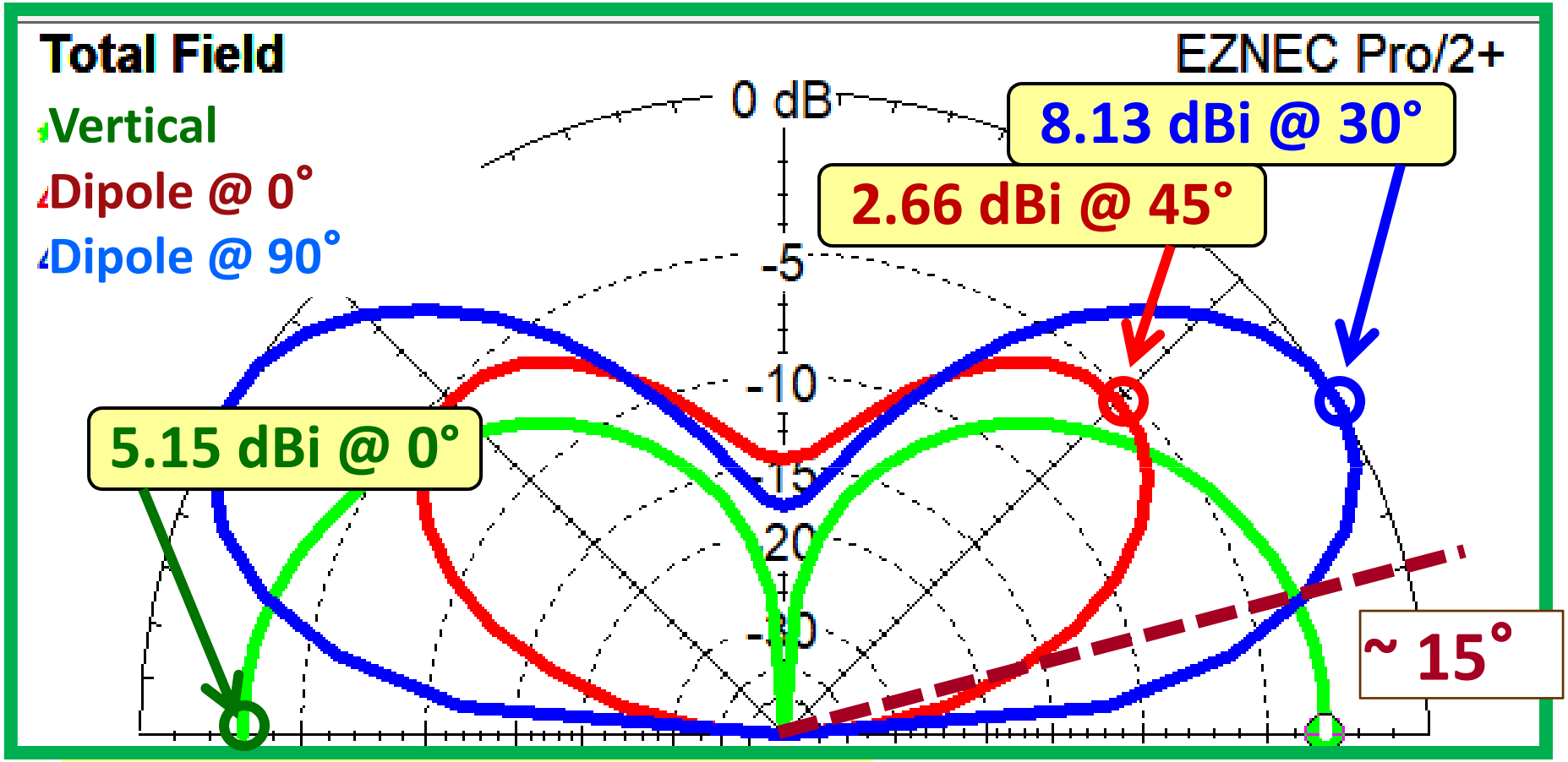

The vertical is always better <15° ➔ DX!

NEC-5

EZNEC Example – "Real" Dipole vs. Vertical

Dipole 66' 1/2 λ high

New England GND

Ground Characteristics affect verticals more than horizontals

Vertical 120 radials

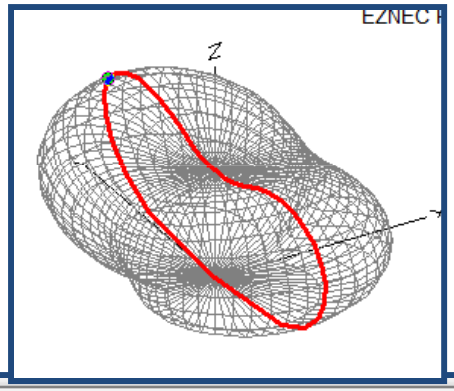

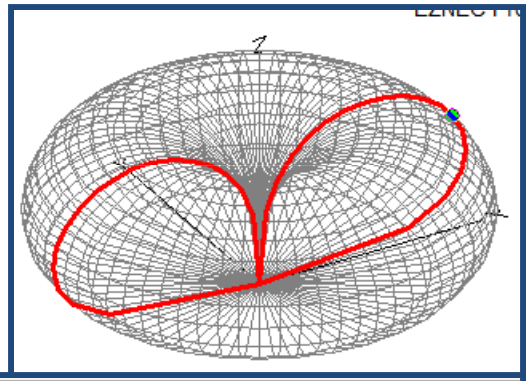

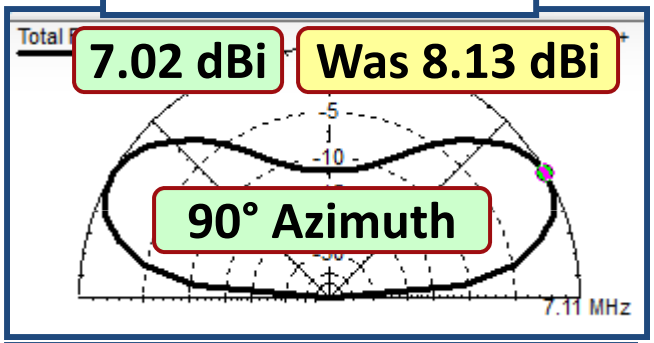

7.02 dBi **Was 8.13 dBi**

90° Azimuth

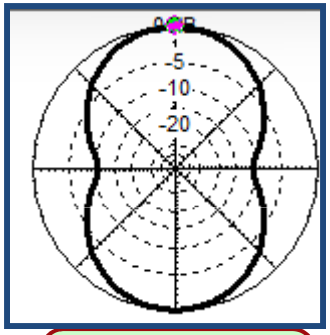

Azim Plot @ 30° Elev

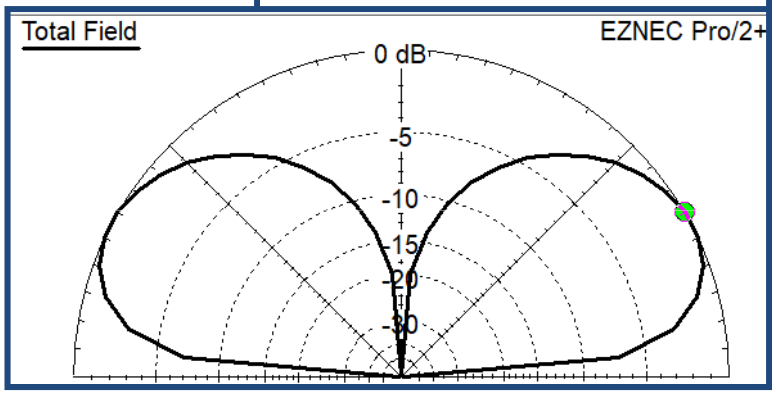

-.029 dBi @ 30°

Was 6.71 dBi @ 0°

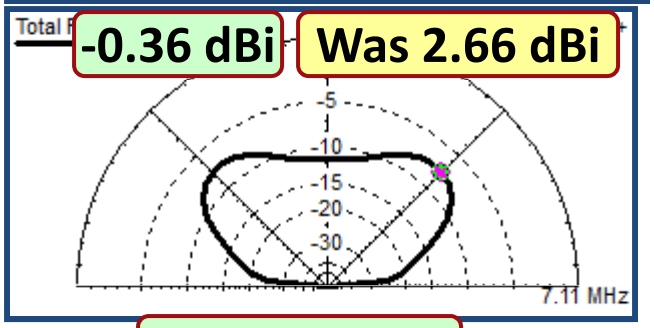

-0.36 dBi **Was 2.66 dBi**

0° Azimuth

NEC-5

EZNEC Example – "Real" Dipole vs. Vertical

Dipole 66' 1/2 λ high

New England GND

Vertical 120 radials

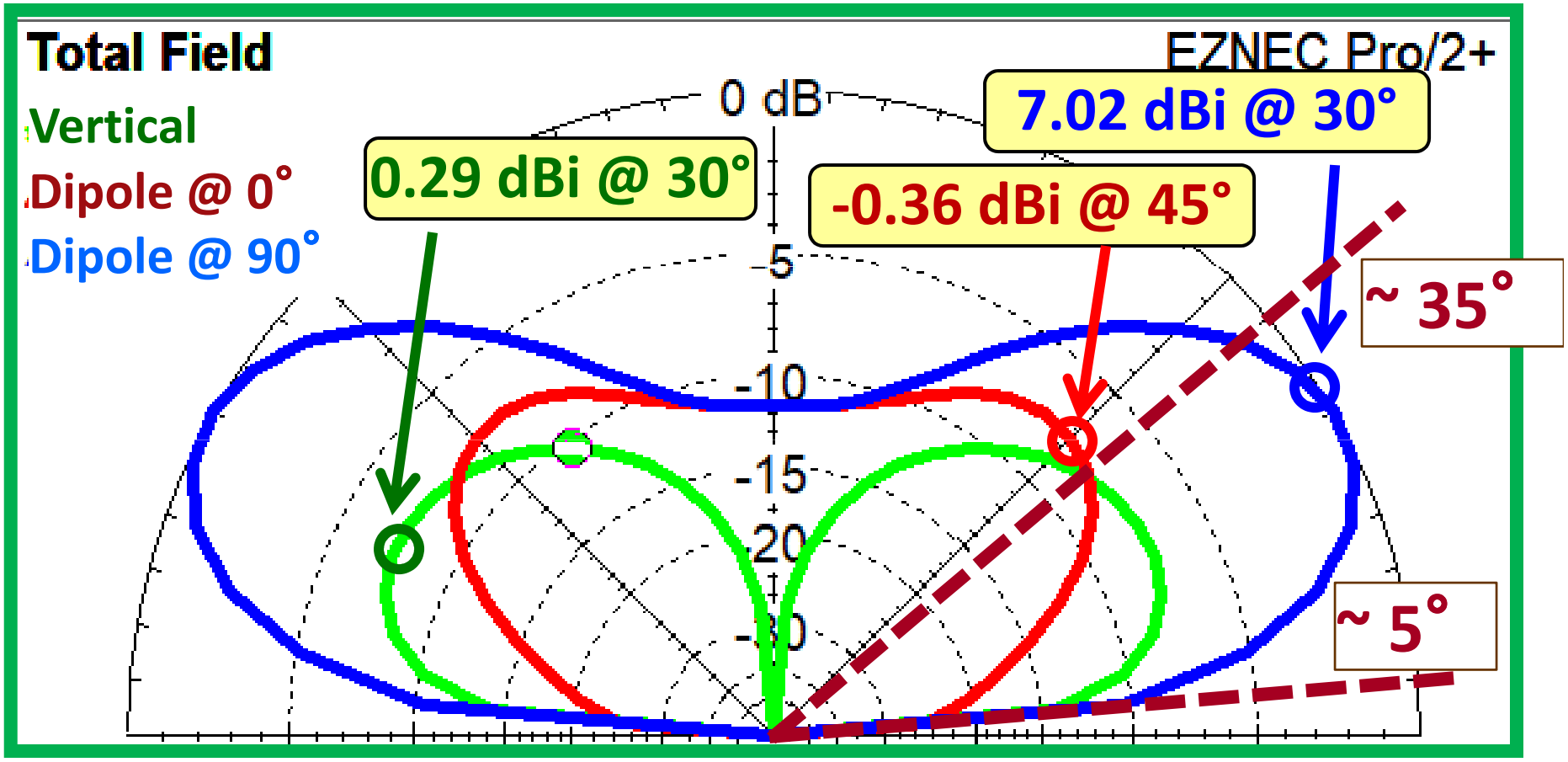

Now it's a toss-up!

NEC-5

EZNEC Example – Original Dipole vs. Vertical

My dipole @ 18’

New England GND

Vertical 120 radials

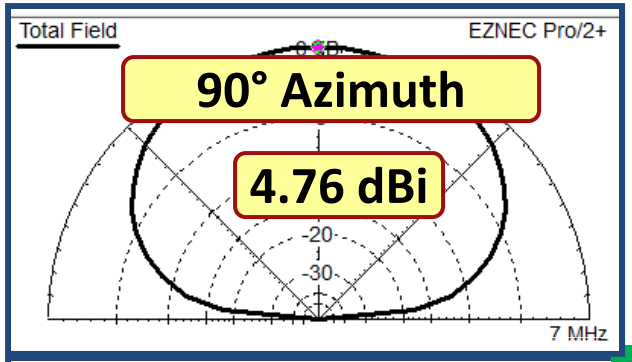

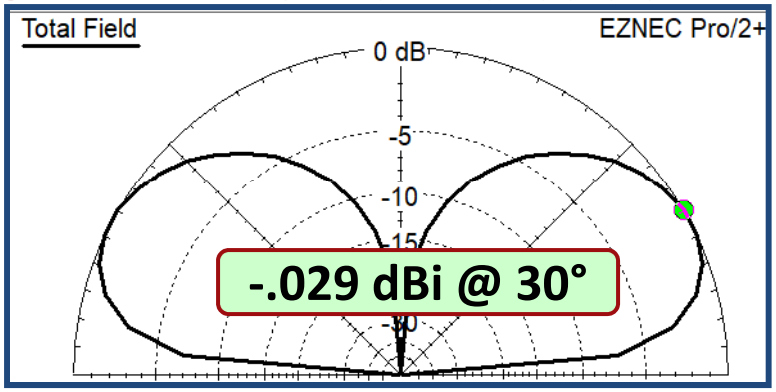

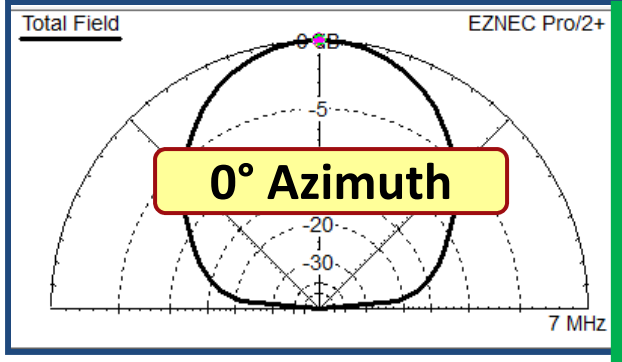

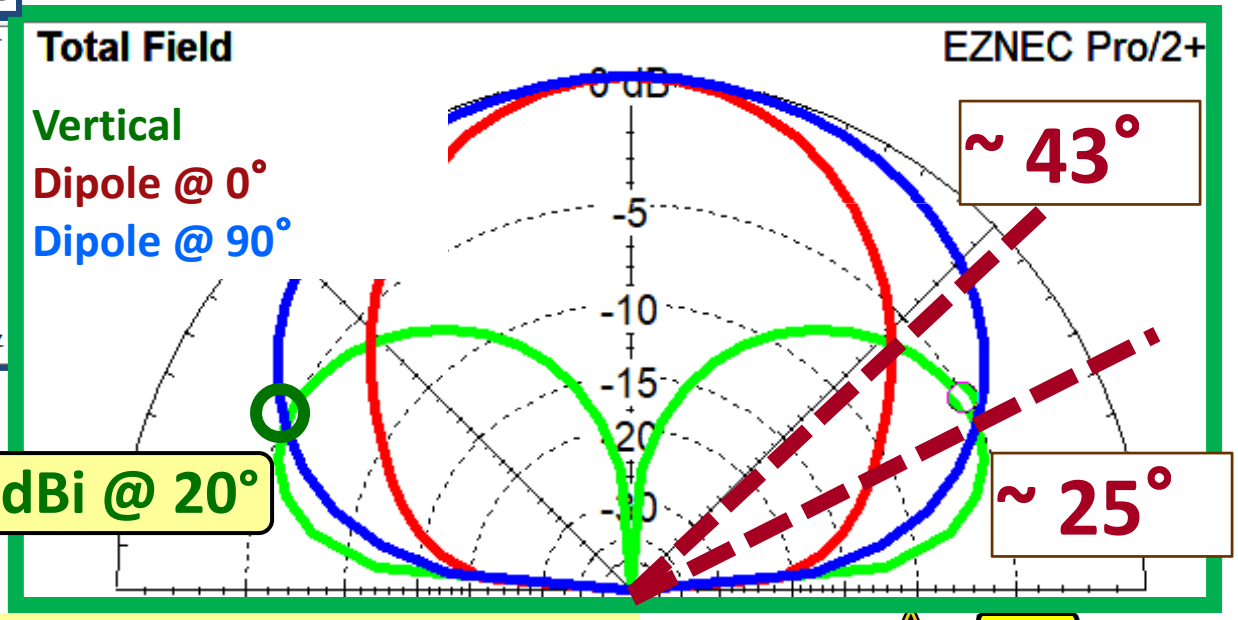

The vertical is better than my low dipole

40m Vertical – Choosing the Radials

BUT -- I don't want to lay down 120 radials!

From the ARRL Antenna Book:

Practical Suggestions For Vertical Ground Systems

At least 16 radials should be used if at all possible. Experimental measurements and calculations show that with this number, the loss resistance decreases the antenna efficiency by 30% to 50% for a 0.25 wavelength vertical, depending on soil characteristics. *In general, a large number of radials (even though some or all of them must be short) is preferable to a few long radials for a vertical antenna mounted on the ground.*

a. If you install only 16 radials they need not be very long - **0.1 lambda** is sufficient.

b. If you have the wire, the space and the patience to lay down **120 radials (optimal configuration),** they should be **0.4 lambda** long. This radial system will gain about **3 dB over the 16-radial case.**

c. **If you install 36 radials that are 0.15 lambda long, you will lose 1.5 dB compared to optimal configuration.**

40m Vertical – Choosing the Radials

From the ARRL Antenna Book:

Practical Suggestions For Vertical Ground Systems

At least 16 radials should be used if at all possible. Experimental measurements and calculations show that with this number, the loss resistance decreases the antenna efficiency by 30% to 50% for a 0.25 wavelength vertical, depending on soil characteristics. *In general, a large number of radials (even though some or all of them must be short) is preferable to a few long radials for a vertical antenna mounted on the ground.*

a. If you install only 16 radials they need not be very long - 0.1 lambda is sufficient.

b. If you have the wire, the space and the patience to lay down 120 radials (optimal configuration), they should be 0.4 lambda long. This radial system will gain about 3 dB over the 16-radial case.

c. If you install 36 radials that are 0.15 lambda long, you will lose 1.5 dB compared to optimal configuration.

From QST, March 2010, pp 30-33:

An Experimental Look at Ground Systems for HF Verticals (and references)

Rudy Severns, N6LF

…four elevated radials at a height of 48 inches are within 0.2 dB of 64 radials lying on the ground.

40m Vertical – Choosing the Radials

From the ARRL Antenna Book:

Practical Suggestions For Vertical Ground Systems

At least 16 radials should be used if at all possible. Experimental measurements and calculations show that with this number, the loss resistance decreases the antenna efficiency by 30% to 50% for a 0.25 wavelength vertical, depending on soil characteristics. *In general, a large number of radials (even though some or all of them must be short) is preferable to a few long radials for a vertical antenna mounted on the ground.*

a. If you install only 16 radials they need not be very long - 0.1 lambda is sufficient.

b. If you have the wire, the space and the patience to lay down 120 radials (optimal configuration), they should be 0.4 lambda long. This radial system will gain about 3 dB over the 16-radial case.

c. If you install 36 radials that are 0.15 lambda long, you will lose 1.5 dB compared to optimal configuration.

From QST, March 2010, pp 30-33:

An Experimental Look at Ground Systems for HF Verticals (and references)

Rudy Severns, N6LF

...four elevated radials at a height of 48 inches are within 0.2 dB of 64 radials lying on the ground.

Assume four elevated radials high enough to be safe: ➔10 ft

Note: Elevated radials must be tuned.

EZNEC Example – Vertical: Radial Comparison

Vertical 120 Radials | **New England GND** | **Vertical w/4 raised radials**

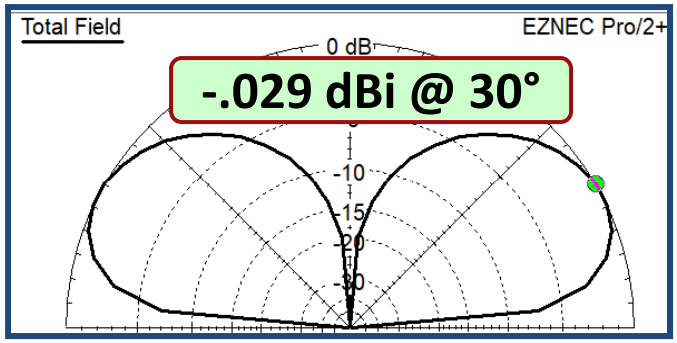

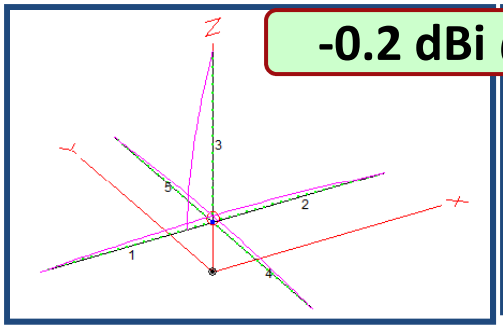

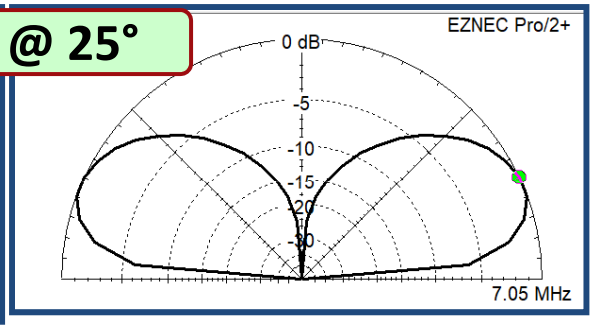

Vertical w/4 elevated radials vs. Vertical 120 radials on ground

Ground = 0.002/13

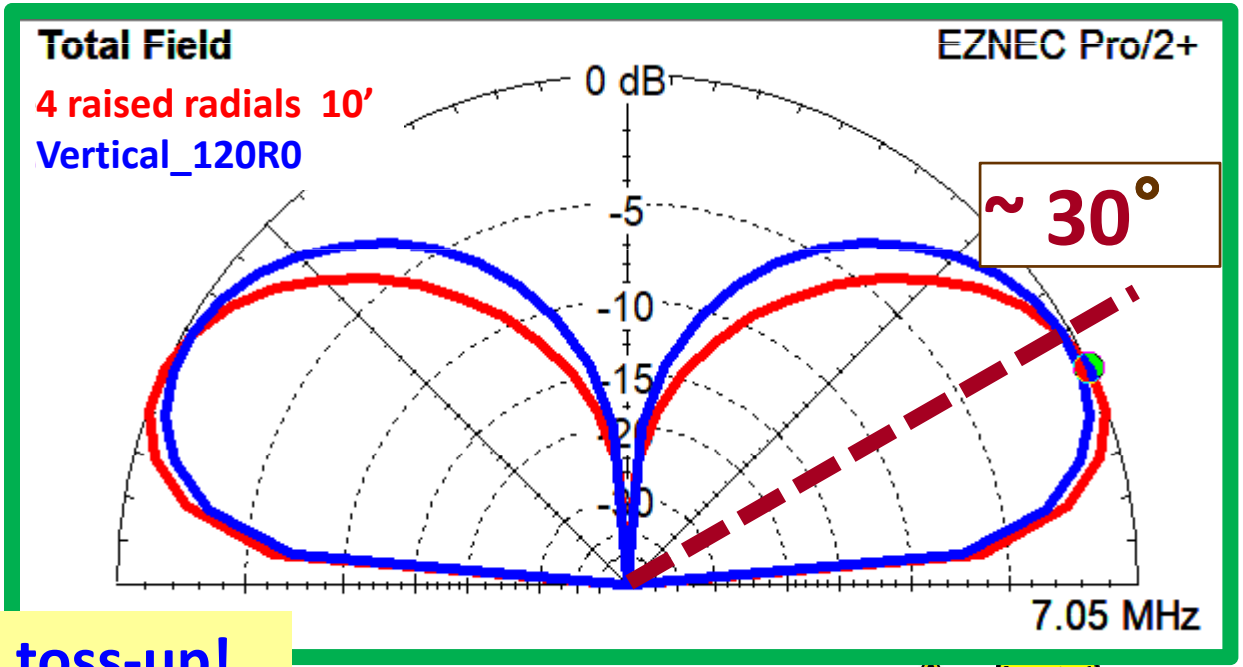

As expected -- it's a toss-up!

EZNEC Example – 18’ Dipole vs. Vertical

18’ Dipole

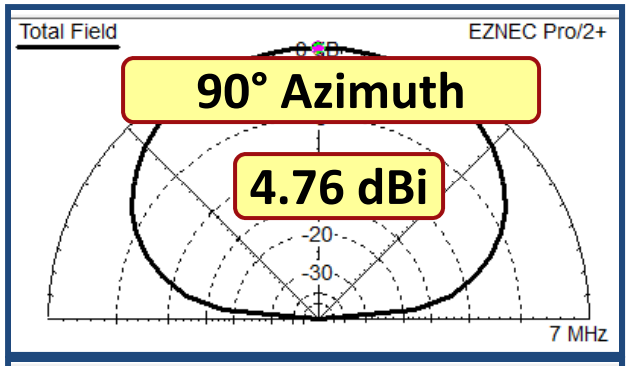

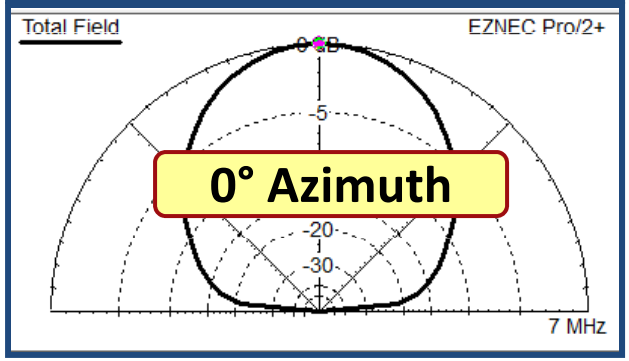

New England GND

But with my low dipole, the vertical is the winner for DX.

Vertical w/4 raised radials

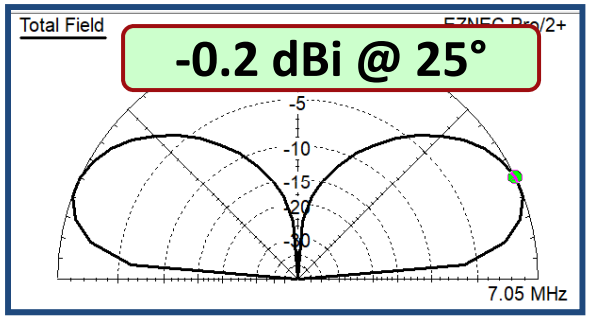

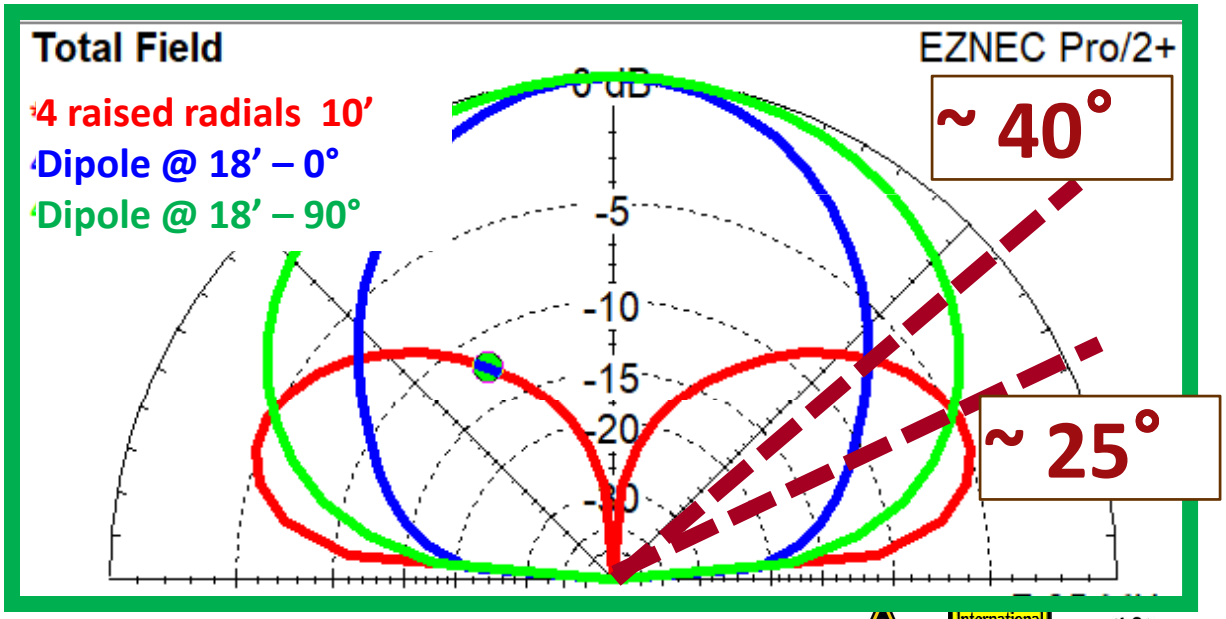

The Actual Antenna

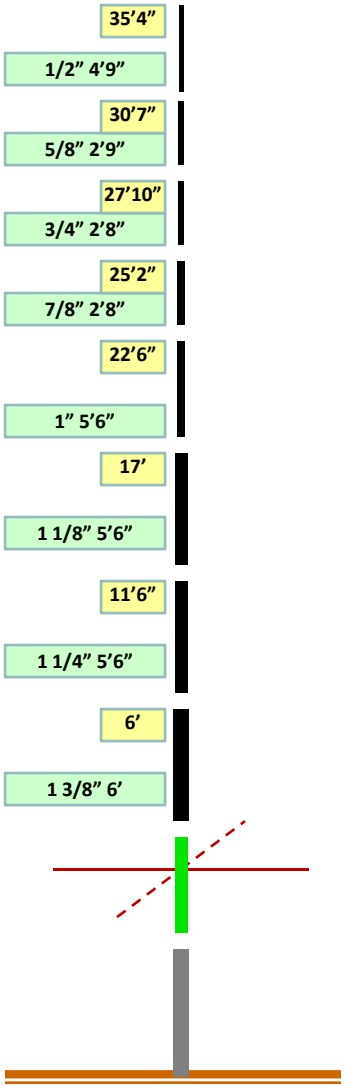



COMPARE ~ 40M Reality

Noise:
Worse on Vertical by ~1-1.5 S-units

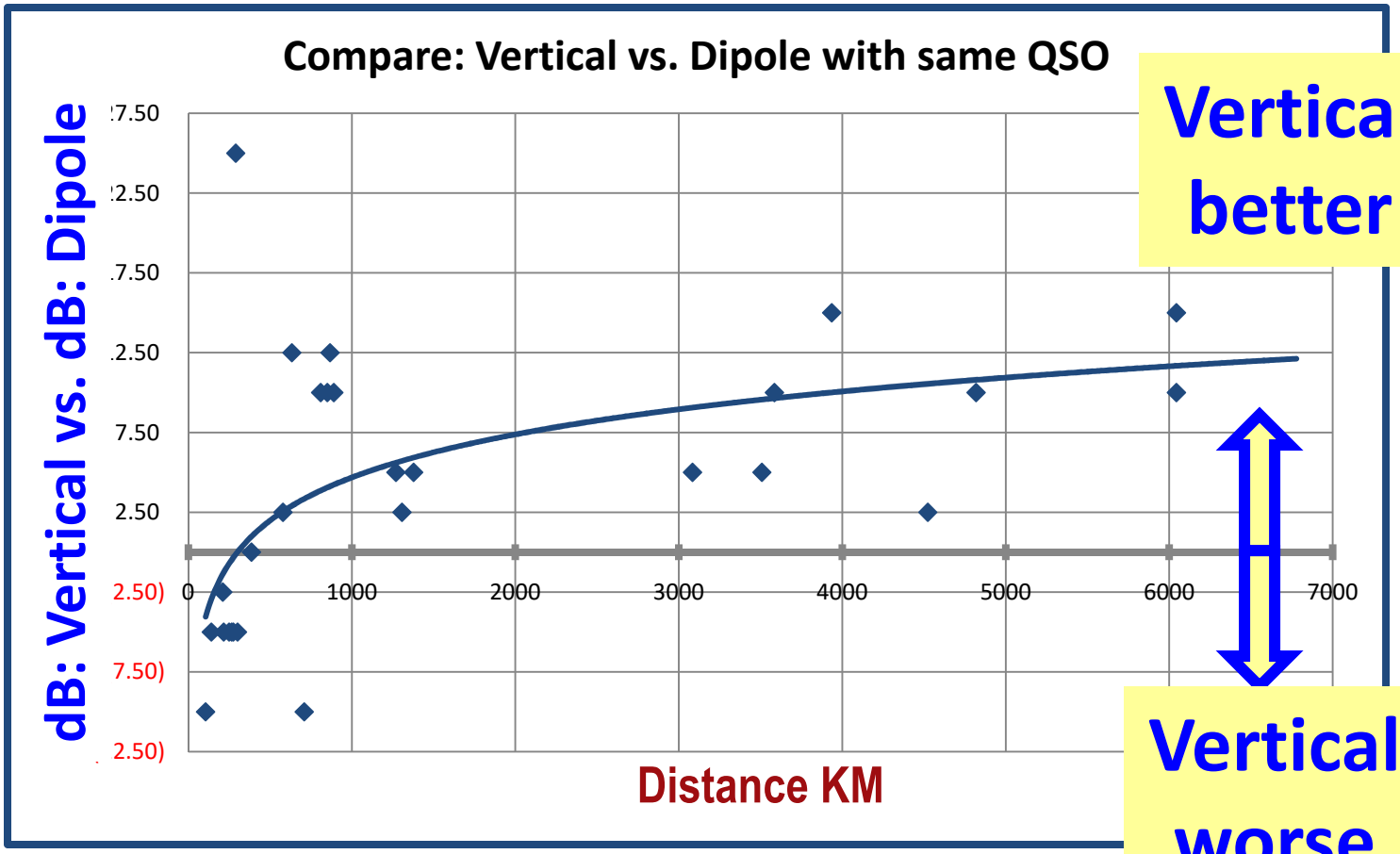

Coax feed: Δ = – 0.25 dB @ 7.1 MHz.

Dipole → 35' of RG8x = 0.25 dB @ swr 1.5:1 = .29 dB

Vertical → 15' of RG8x + 105' of Bury-Flex = 0.5 dB. @ swr 1.5:1 = .55 dB

EZNEC:

Lots of functionality left for your homework

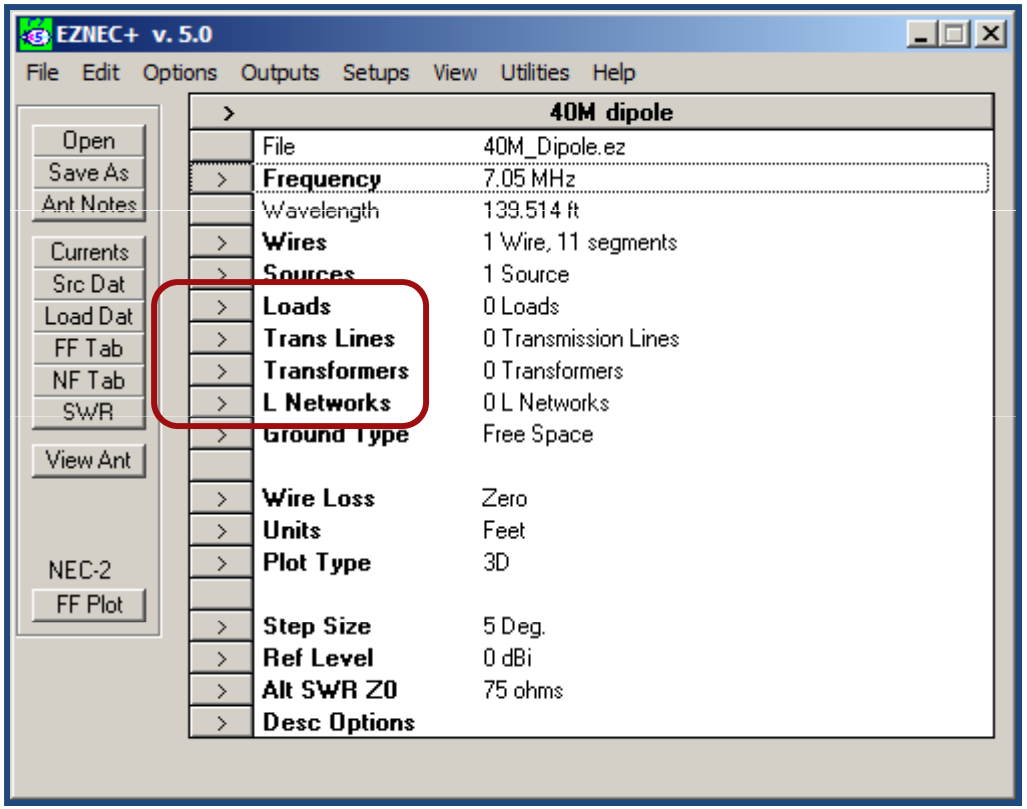

Conclusions

EZNEC

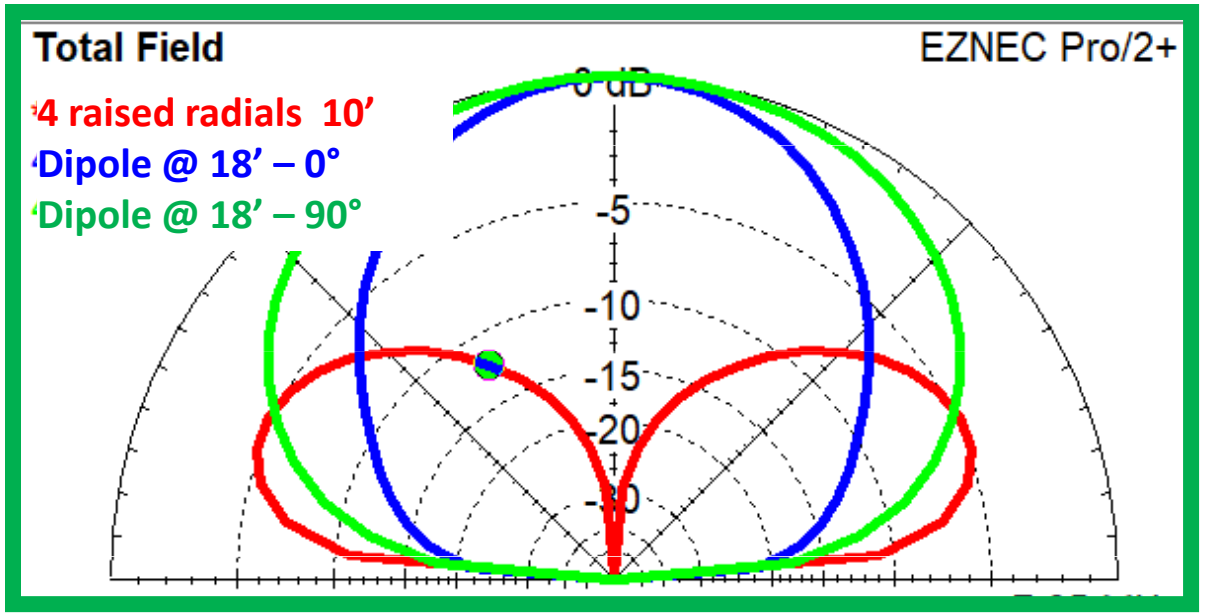

Complicated, but allows you to model and discover antennas and compare them to reality, AND LEARN.

Conclusions

- **You Can't Beat Physics**
- Understanding antennas
  →understanding ANTENNA SYSTEMS
  - HOW YOU WANT TO USE YOUR ANTENNA
  - EFFECT OF HEIGHT
  - GROUND CHARACTERISTICS
- All antennas are COMPROMISES
- All models are SIMPLE EXAMPLES of reality
- Your real antenna WILL NOT MATCH your model

"All models are wrong. Some are useful"

British Statistician *George Box*, 1976

Appendix

This talk is available at:

https://www.qsl.net/w1dyj/

Abstract: Antenna Modeling: EZNEC

This presentation will start with some history detailing why Larry has always been interested in understanding antennas. It will then go over the use of EZNEC, ending with a real world example. It will hopefully help you get a start at modeling your own antenna systems.

Licensed in 1961 as novice KN1VFX, Larry became W1DYJ in 1966. After acquiring three degrees in EE from MIT, Larry was hired in 1969 by Hewlett-Packard Medical's Cardiac R&D lab in Waltham MA (later in Andover MA,) working on Electrocardiographs and then Cardiac Ultrasound systems. He moved to HP Medical Education in 1993, responsible for technical and project management training. When HP split apart, he became Agilent Technology's global program manager for their Learning Management System. "Retiring" in 2005, he consulted for Avago (now Broadcom) on eLearning technologies through 2012. He now spends his time chasing DX and contesting in Woburn, playing with antennas, traveling with his wife Maren, and attending many jazz and classical concerts. He is the net manager and newsletter editor for the MMRA, publications editor for HamXposition, and a member of the YCCC.

Ham Radio ~ Who Am I?

- Mom was a high School cafeteria worker. Dad was an electrician and had a dual workshop: ***woodworking*** and ***electronics*** (my two continuing favorite hobbies). They both highly valued education.
- As a kid: I "played" in his workshop, had an erector set,
  and read all the Tom Swift books…
- Built a crystal radio when I was 12 (1958) –the first station heard was the BBC
  and I was hooked on radio.
- Obtained my ham radio license at 15 in 1961 (a junior in HS).
- Went to MIT (SBEE'67, SMEE'69, EE'70)
  in part because of my ham radio experience.
- Hired (1969) by HP Medical (Waltham/Andover) developing hospital cardiac instrumentation (electrocardiographs, then real-time cardiac ultrasound)
  in part because of my practical experience with ham radio.
- Moved to HP/Agilent Corp Ed (project management experience) in 1993
- "Retired" in 2005; then part-time consulted for Avago (now Broadcom) as their eLearning platform World-Wide Program Manager
- Finally retired (for real) in 2012 – now play with ham radio