903 MHz Transverter WA3JUF 1986

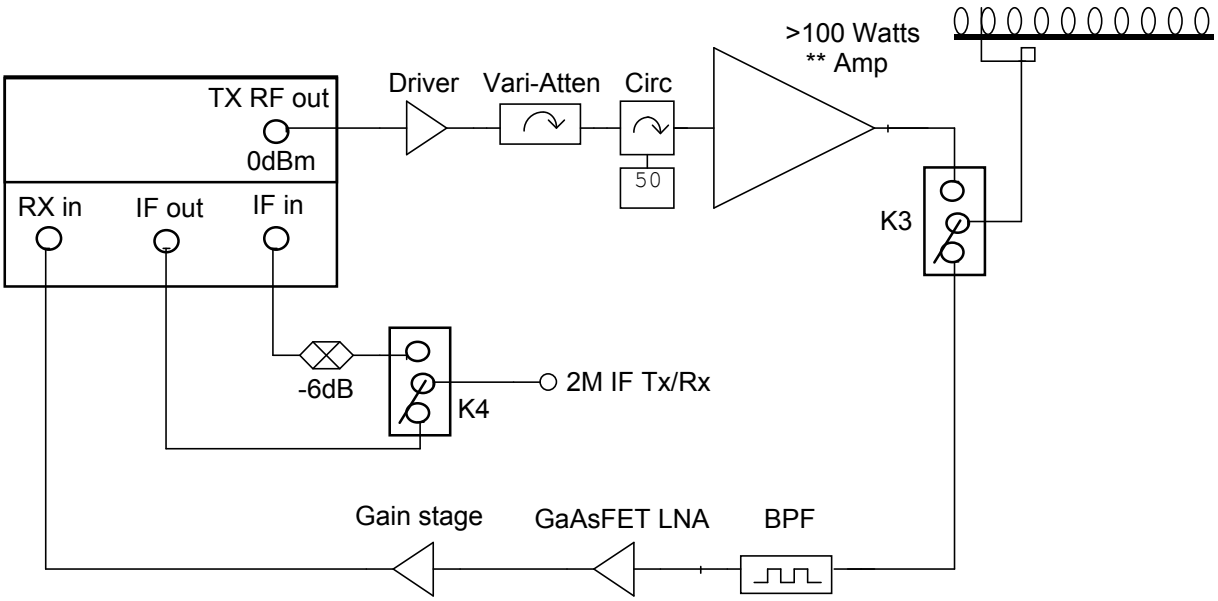

** Amp = 1 Ericsson 900 MHz board driving
a combined pair of 60W Ericsson boards.

DC switching

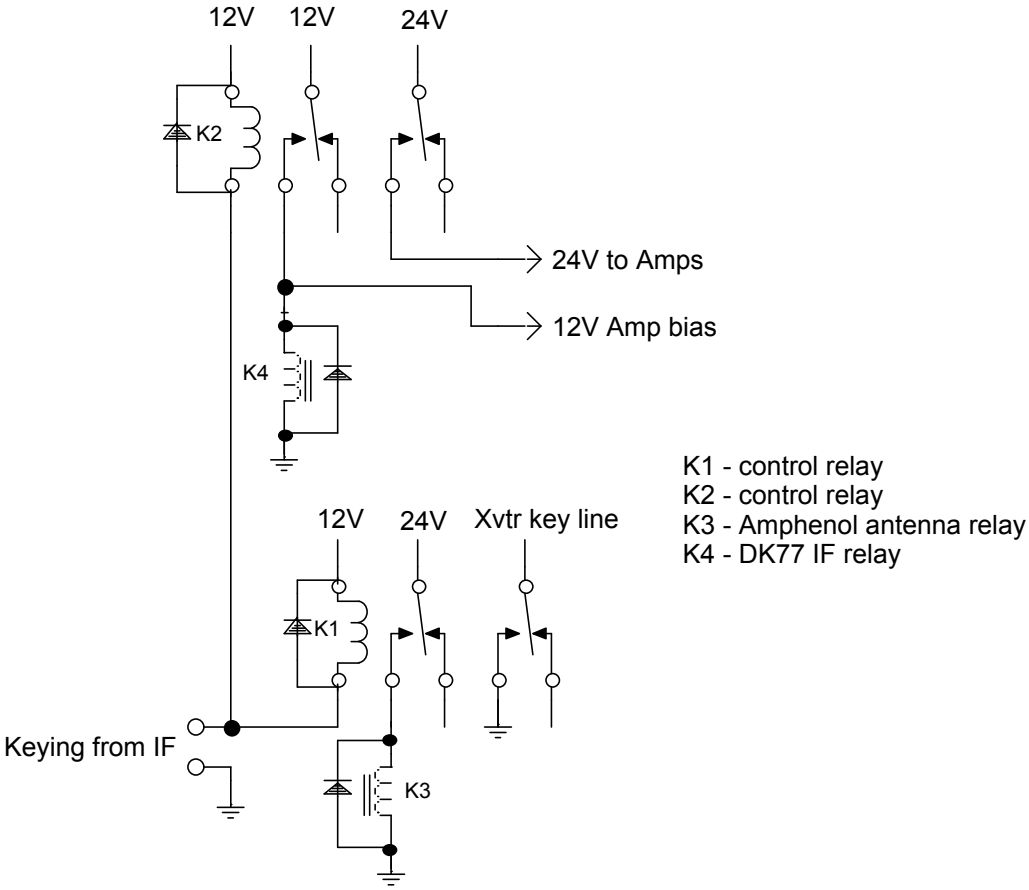

K1 - control relay
K2 - control relay
K3 - Amphenol antenna relay
K4 - DK77 IF relay

902/903 MHz Transverter
WA3JUF 1995

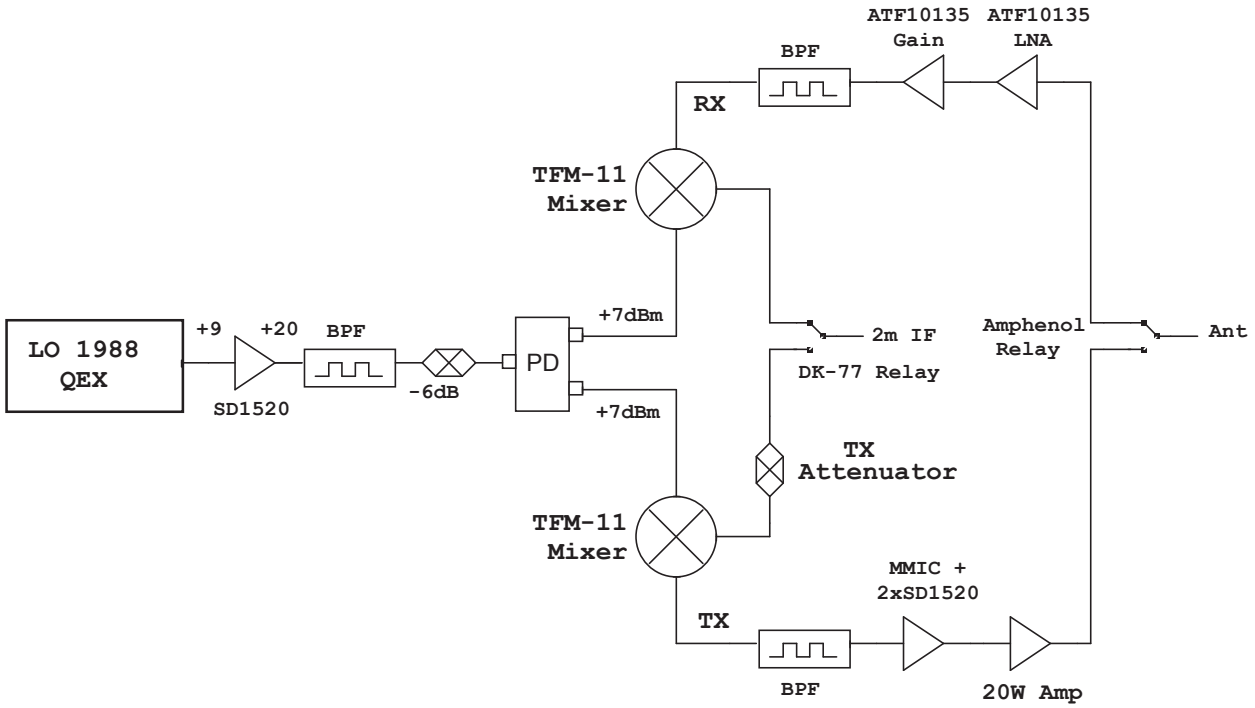

FROM THE DESK OF WA3AXU

RONALD J. WHITSEL
209 FROG HOLLOW RD.
CHURCHVILLE , PA 18966

903 Mhz Filter

MAT'L - .025 BRASS

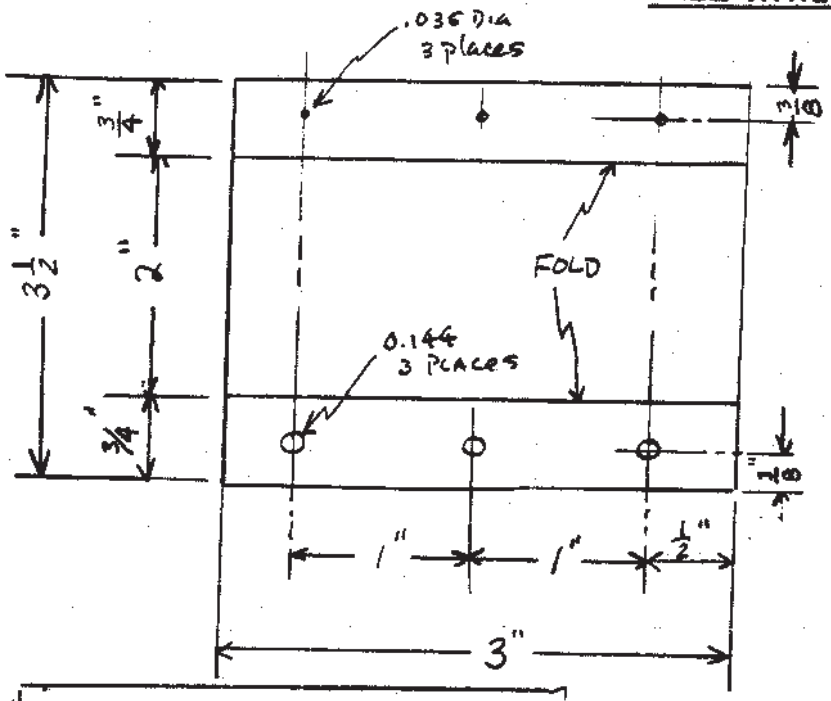

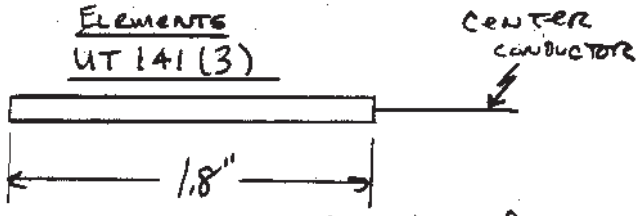

See Ref. below for preparation technique and tuning

±28 mhz	-30db
± 56 mhz	-45db
Insertion Loss	<2db

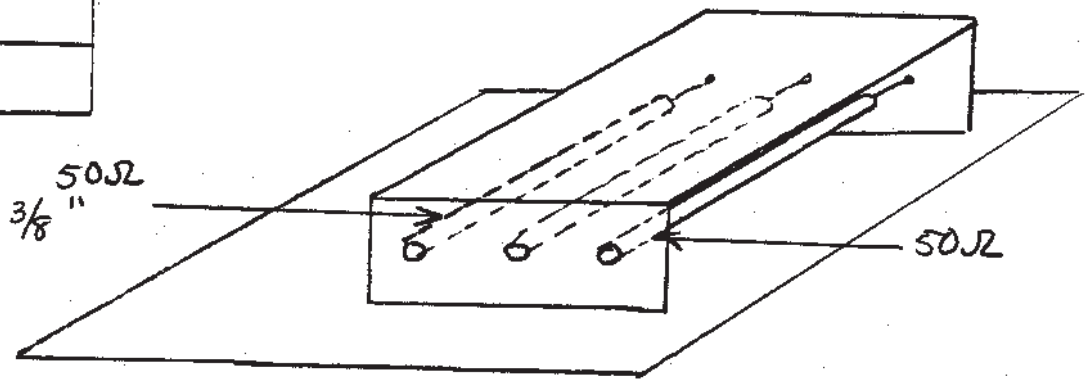

REFERENCE: 1986 ARRL HANDBOOK, PAGE 32-21

1/87