# 903 MHz 125mW Linear Amplifier
# WA3JUF 1985
# Class AB G=11dB

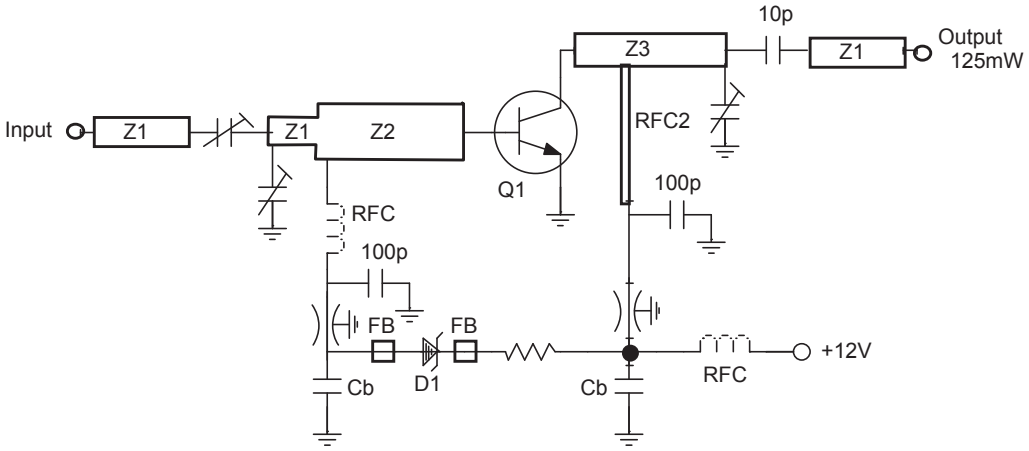


Q1 - BFR96, SD1333
Z1 = 50-ohm 0.080" x 0.3"
Z2 = 0.280" x 1.0"
Z3 = 0.140" x 1.3"
D1 = 9.1V zener
RFC = 8t, #24, 0.1"ID
RFC2 = 0.040" x 1.0"
Cb = 10uf tant + 0.1uf
Trimmer caps = 12.5pf EF Johnson
PCB = 1/32" Teflon Er=2.5

**903 MHz SD1520 Amplifier**

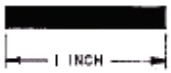

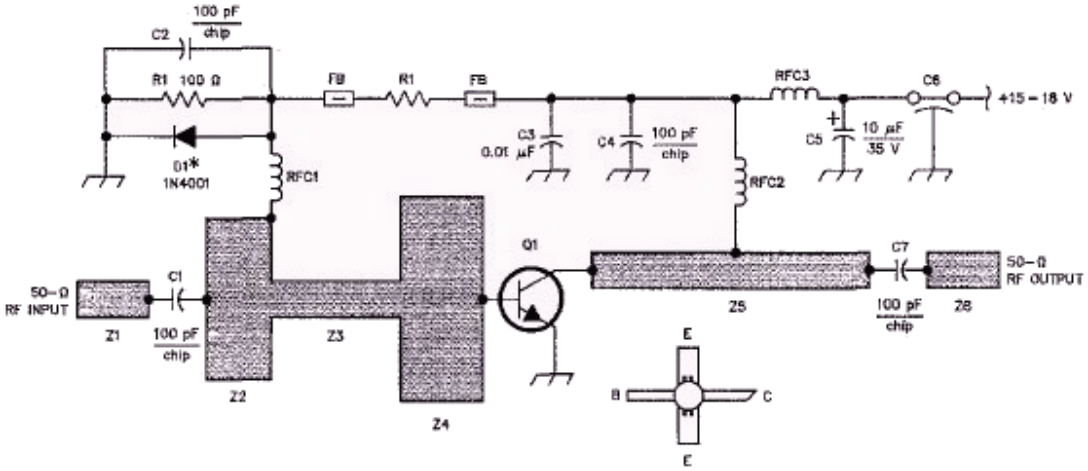


**R1=1.5-1.8K 1/2W** **RFC = 8t #28 close wound 0.1" ID**

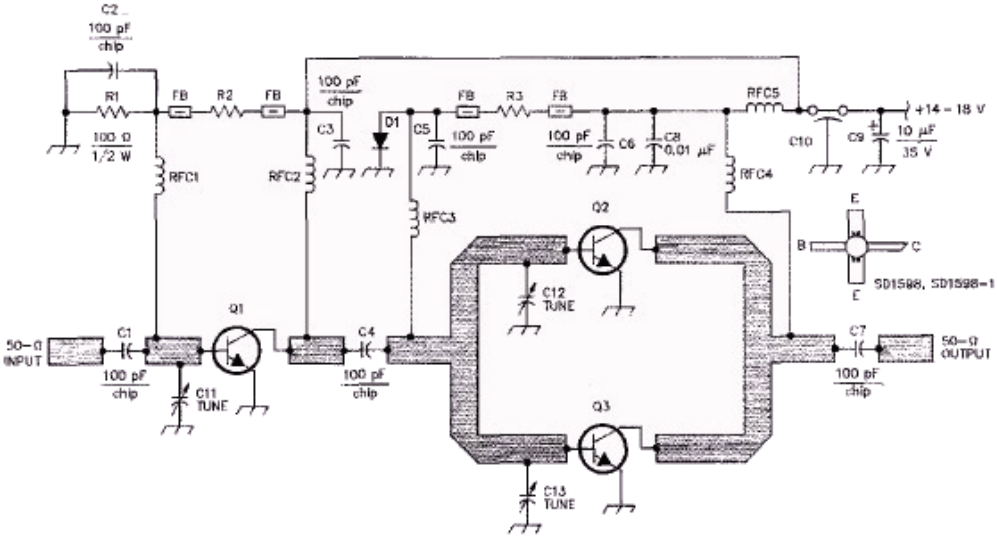


C10—0.001-μF feedthrough.
C11-C13—0.6- to 8-pF Johanson piston trimmer.

Q1—SD1598 or SD-1598-1.
Q2, Q3—SD1598.
R2, R3—1.5-1.6 kΩ, ½ W.

RFC1-RFC5—8 turns of no. 24 enam wire, closewound, 0.1 inch ID.

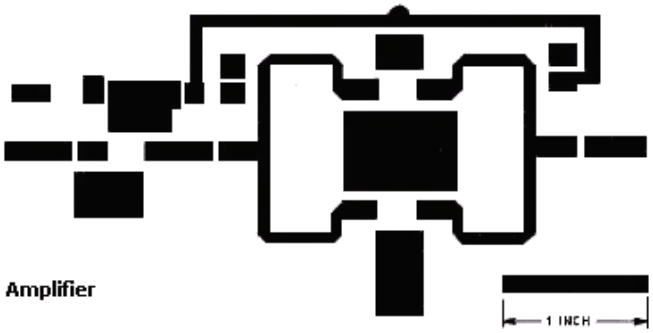


**903 MHz SD1520 Amplifier**

# 903 MHz Linear Amplifier

**12-13 dB Gain @ 1dBc  Icq = 75 mA**

**Pout up to 20 Watts @ 1dBc**

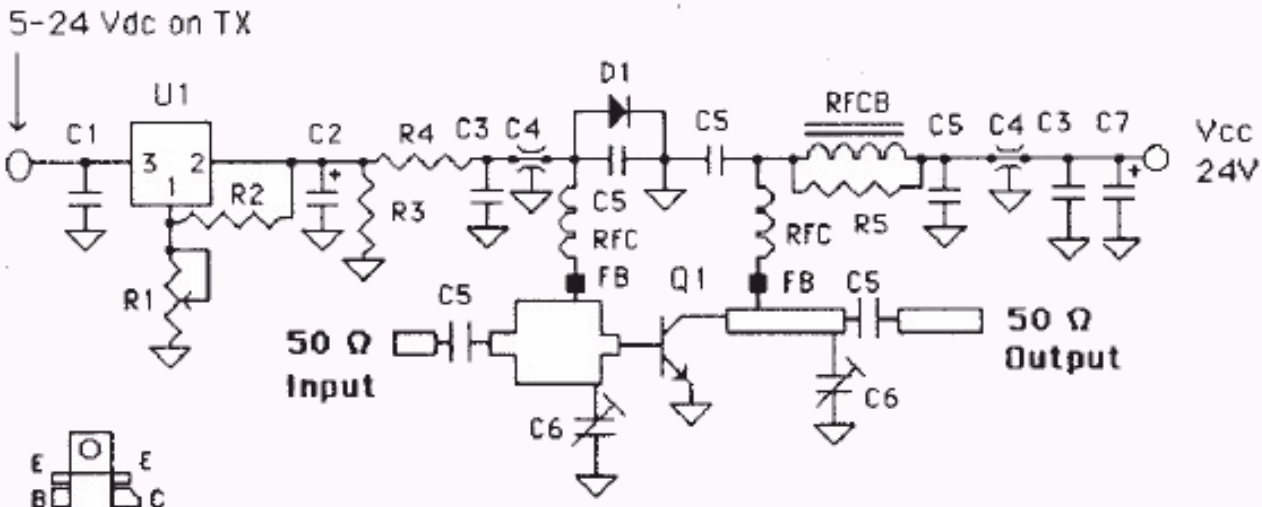


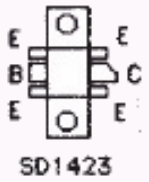


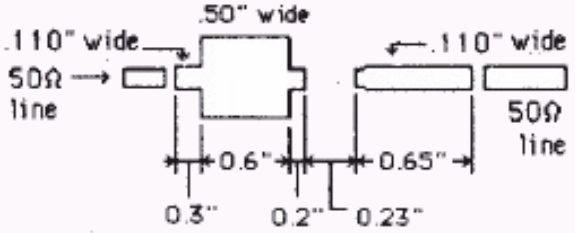


PC board material is 0.032" Teflon Er=2.55 50Ω lines are 0.080" wide, any length.

Q1 SGS-Thomson Microelectronics SD1423

| | |
|---|---|
| C1 .22 ufd disc | RFC 6-8 turns #24 , 0.1" ID |
| C2 1 ufd Tantalum | RFCB 2 turns #24 thru 2-FB43s |
| C3 .1 ufd disc | FB Ferrite bead FB-43 |
| C4 .001 ufd F.T. | R1 100 Ω mini pot. |
| C5 100 pf chip | R2 240 Ω 1/4 watt |
| C6 0.8 - 8.0 pf Johanson piston trimmer | R3 10 Ω 1 watt |
| C7 10 ufd/35 Vdc elec. | R4 15-20 Ω 1 watt |
| U1 LM317T regulator | R5 10 Ω 1/4 watt |
| | D1 1N4007 attached to Q1 flange |

**D. Mascaro, WA3JUF 1989/1992**

# 903 MHz 40W Linear Amplifier
# combined 2 x SD1423 20W amplifiers
# WA3JUF 1992

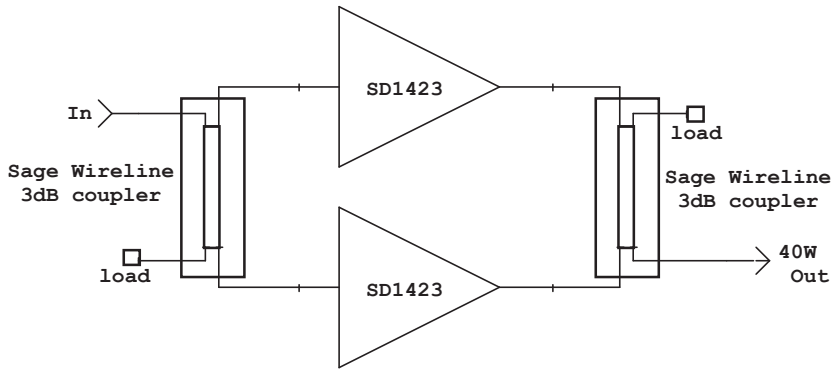


Interconnections to the Sage combiners is done with UT-141 coax.
Although there are combining losses, 40W and 80W can be achieved
by increasing the Vcc to 25V and adjusting the Icq.

# 903 MHz 80W Linear Amplifier
# combined 4 x SD1423 20W amplifiers

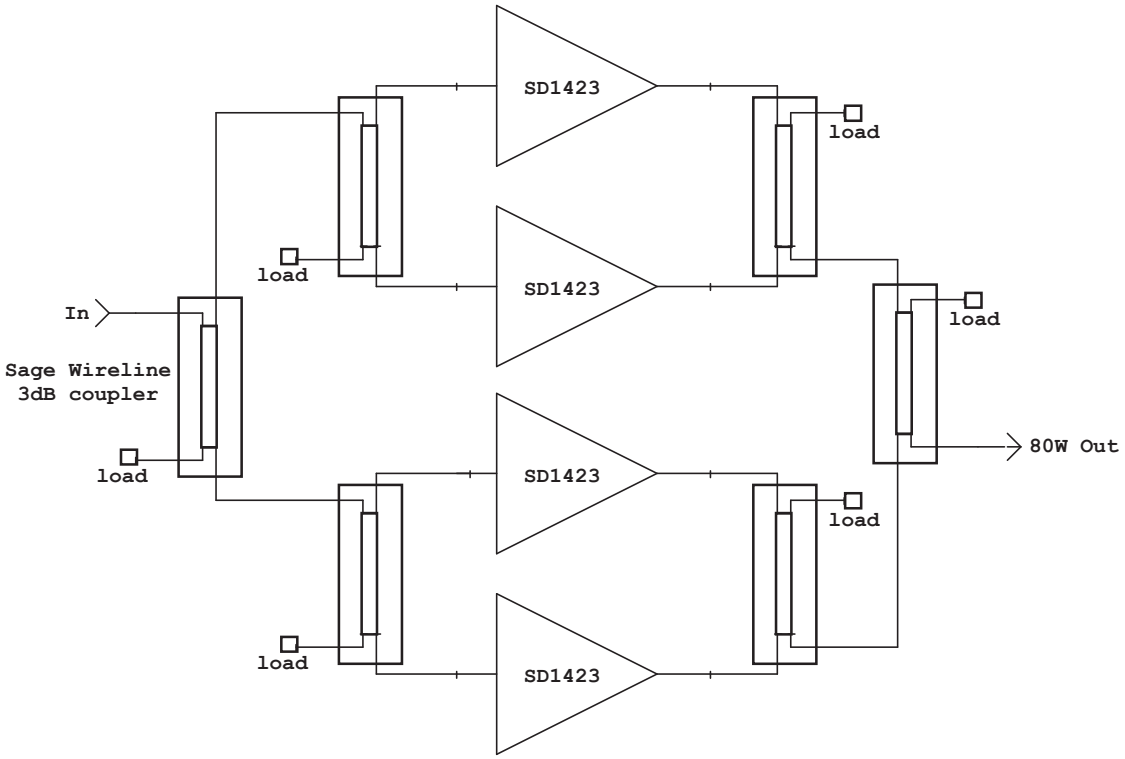

# 903 MHz 220W Linear Amplifier
# WA3JUF 1991

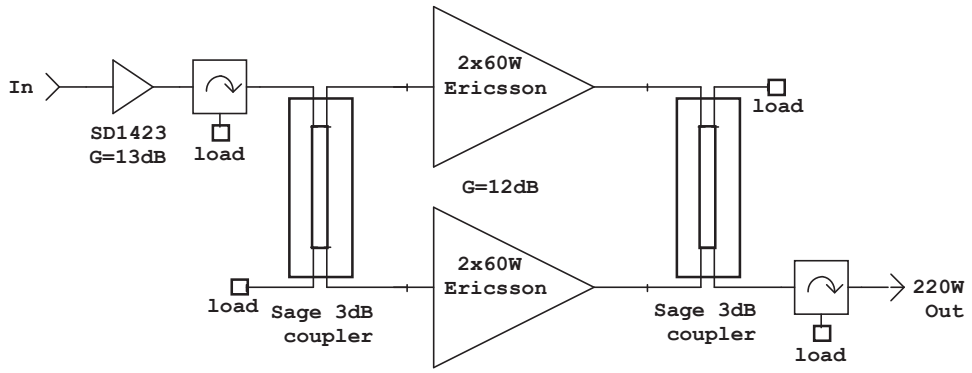


Interconnect cables are UT-141

The 60W boards drive up to 65W. Transverter driver vari-attenuator set for 220W output to antenna.

# 903 MHz 110W Linear Amplifier
# WA3JUF 2005

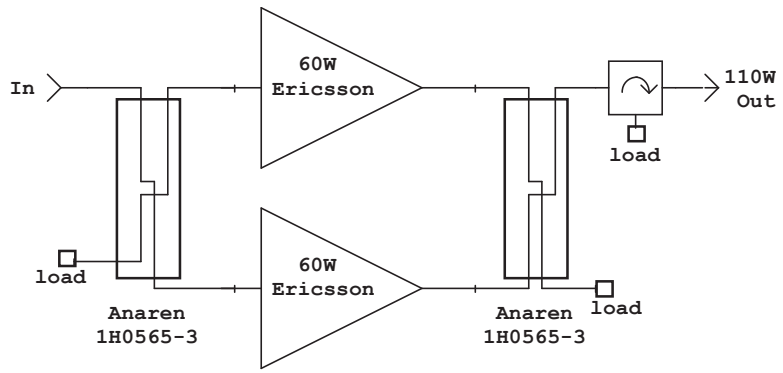


Interconnect cables are UT-141

1-2GHz Hybrids work OK @903 with some imbalance

# 903 MHz 100W block diagram

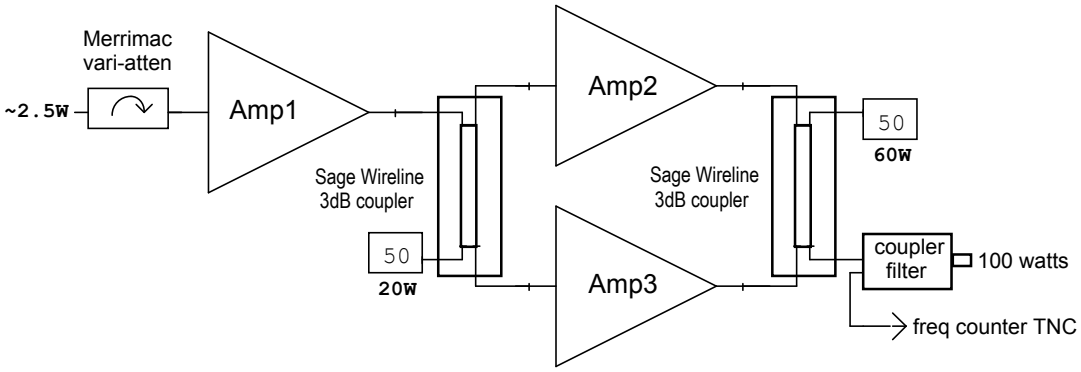


**Amp1 - single push-pull amp**
**Amp2 - 2 combined push-pull amps**
**Amp3 - 2 combined push-pull amps**
**P.S. = 26VDC**

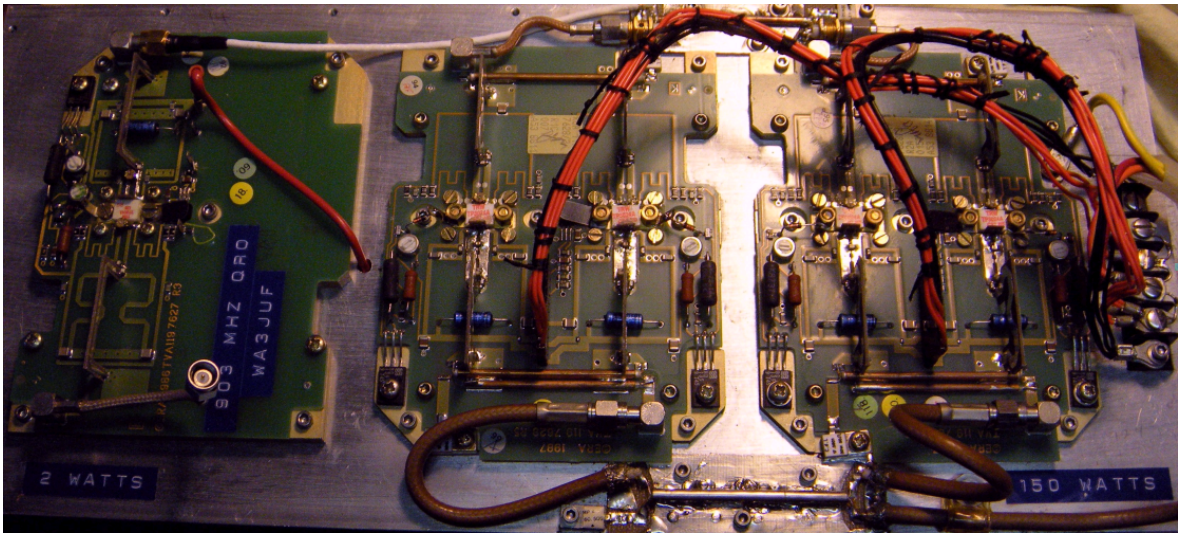

## 800-950 MHz Linear Amplifier

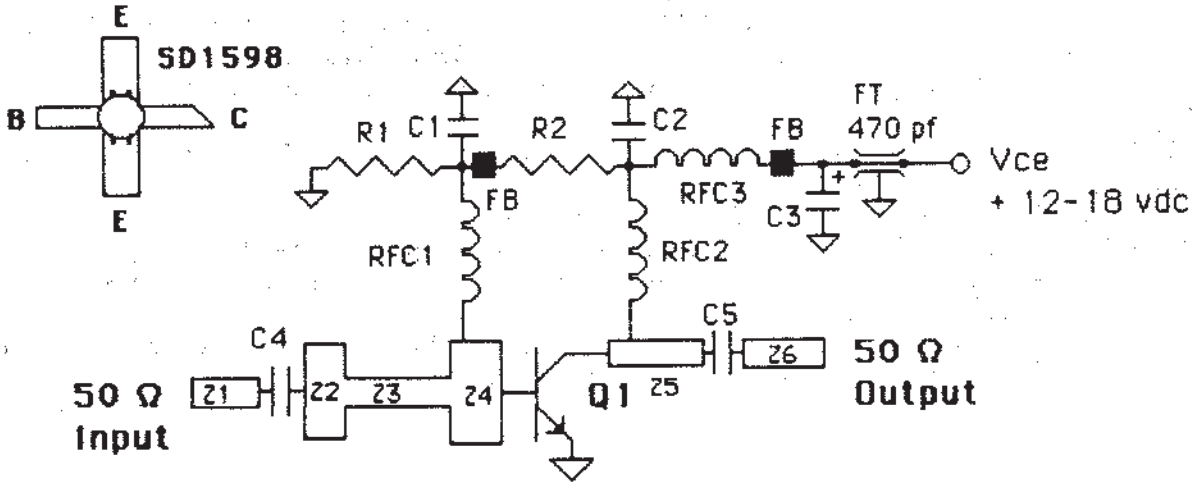


Gain 10-12 dB up to 350 mw Pout
Gain 7-9 dB gain up to 1 watt Pout

Adjust Vce and bias for the Pout level being used. Use an LM317T regulator for the supply voltage.

| | |
|---|---|
| RFC1 | 0.03" X 1.3" microstrip |
| RFC2 | 0.03" X 1.5" microstrip |
| Z1,Z6 | 0.11" X any length 50 Ω |
| Z2 | 0.32" X 0.6" microstrip |
| Z3 | 0.15" X 0.5" microstrip |
| Z4 | 0.40" X 0.5" microstrip |
| Z5 | 0.15" X 1.0" microstrip |
| FB | Ferrite beads |
| R1 | 100 Ω 1/2 watt |
| R2 | ≈1.5 KΩ 1/2 watt |

Adjust R2 for Icq 20-40 ma. depending on gain or Pout

| | |
|---|---|
| Q1 | Thomson/Mostek SD1598 |
| C1,2,4,5 | 100 pf chips |
| C3 | 10 ufd/35 vdc electrolytic |
| RFC3 | 8t, #26, 0.1" ID |

Trim Z2 and Z4 for input RTL and width of Z5 for maximum Pout.

Board material is 1/16" G-10 fiberglass double sided. Ground plane side is unetched.
Use rivets at all dc and RF grounds.

**WA3JUF**
**D. Mascaro 1986**