# A 759-MHz Local Oscillator

**By Dave Mascaro, WA3JUF**
**RD 1, Box 467**
**Ottsville, PA 18942**

The local oscillator (LO) chain is the heart of a transverter. The LO is the stage or stages that produce the signal that is mixed with the IF signal to produce the transmitted signal in an upconverter or mixed with the received signal to produce the IF signal in a downconverter. The frequency stability of a transverter depends almost totally on the LO, since the frequency stability of the IF transceiver is usually very good. (Normally a state-of-the-art HF transceiver or 2-meter transceiver is used for the IF rig.)

My design goal was a local oscillator that could be duplicated easily and could be used for many different amateur bands. The LO chain described here is the easiest to duplicate of any I have tried. Although designed for a 903-MHz transverter, the same basic design can be used for other bands.

### Circuit Description

Fig 1 is a schematic of my design. Q1, the 94.875-MHz crystal oscillator, is a version of an oscillator described by Joe Reisert, W1JR, in March 1984 *ham radio* magazine. This is one of the better designs published in the amateur literature. It is relatively easy to build and tune up. Q2 is a 94-MHz amplifier with sufficient gain and power output to drive the multiplier stage.

The crystal frequency chosen, 94.875 MHz, results in an LO frequency of 759 MHz. This frequency makes the calling frequency of 903.1 MHz correspond to 144.1 MHz on the IF transceiver (± crystal oscillator and IF-rig calibration error). Changing the crystal frequency to 94.75 MHz results in an LO frequency of 758 MHz; in this case, 903.1 MHz corresponds to 145.1 MHz on the IF radio.

Very few crystal oscillators come out exactly on frequency. More than the "cut" of the crystal is involved here. The circuit design and components contribute most of the frequency error of a crystal oscillator. After multiplication to the final frequency, a small crystal-oscillator error can contribute to an LO error of many kilohertz.

Trying to "pull" the crystal usually results in an unstable oscillator, which is worse than not being able to read the frequency directly on the IF radio's display. Measure your local oscillator frequency and note the frequency error. Add or subtract the error from the IF rig display when operating. An alternative is to replace the crystal with one cut for a frequency higher or lower than the original to correct for frequency error.

*Frequency Multipliers*

Before going into the specifics of my multiplier design, a few general words about frequency multipliers are in order. Over the years I have tried all kinds of frequency multipliers—active and passive, tube type and solid state. I found it was harder to get the multipliers running as I added more stages of multiplication. Even with a spectrum analyzer, most solid-state multiplier-chain designs are hard to duplicate.

Active multipliers present a real challenge. Transistor beta varies from device to device, so bias characteristics vary among devices. In the case of a dc-biased multiplier stage, you must carefully adjust the bias circuit or the transistor may act like a linear amplifier instead of a frequency multiplier. This means you have to monitor and adjust the collector current of each stage for best performance as a multiplier. Many hours can be spent in front of a spectrum analyzer, and still the results can be unfavorable. Of course, when more drive is available, class-C multiplier stages are easier to use.

Passive multipliers using varactor diodes and step recovery diodes (SRDs) work very well, but their tune-up and mechanical mounting is time consuming and the results are variable. The price and availability of such diodes is also a limiting factor for amateur experimenters.

*A Simple Multiplier*

The x8 frequency multiplier described here uses an inexpensive 1N914 diode (D1) and a two-pole microstrip filter (C13, L5, C14, L6, C15). The crystal-oscillator frequency (94.875 MHz) is multiplied eight times directly in one stage. The two-pole filter selects the desired harmonic—759 MHz. All other harmonically related signals are down more than 25 dB. Non-harmonically related spurious signals are down more than 60 dB.

*759-MHz Amplifier*

The 759-MHz RF signal at the filter output is of relatively low power (-10 dBm or less) because of the low efficiency of the 1N914 multiplier diode. I tried a Schottky diode at D1, but it made little difference in power output. I suppose other diodes and matching could be used to increase the efficiency of the multiplier stage, but that would hardly be worth the effort. Any signal available at the output of the filter can be amplified to a usable level with monolithic microwave integrated circuits (MMICs). These amplifiers are truly an RF experimenter's dream-come-true.

The 759-MHz signal is coupled from L6 through a dc blocking capacitor, C16. Following the filter is a two-stage MMIC amplifier consisting of U2 and U3. Gain is 20-25 dB depending on the MMICs themselves and the values of bias resistors R8 and R9. Power output in excess of +10 dBm (10 mW) is easily obtainable. There is power output to spare, so the two-pole filter can be tuned with a little added insertion loss to further remove the unwanted harmonics. The 10-mW output can be used with a two-way power divider to supply an LO to two mixers in a transverter.

### Construction

Initially I built the different stages of this project on multiple breadboards, as I do with most of my RF designs. I used separate boards for the crystal oscillator, 94-MHz amplifier, x8 multiplier and filter, and MMIC amplifiers. I scratched out the circuit patterns on G-10 PC-board material with a razor knife and a soldering iron. After each stage was checked out, I made a single PC board.

Fig 2 shows the final PC board design. The LO is built on 1/16-inch G-10 fiberglass double-sided PC board material. Double-sided PC board is used because of the microstrip circuitry and to allow for easy ground connections. The board can be etched using the full-size artwork supplied.

After drilling the component-mounting holes, you must clear away copper on the unetched side for all connections that are not grounded. This is necessary so that components do not short to the ground plane. This procedure is easily accomplished as follows: 1) Drill all non-ground mounting holes. 2) Clear these holes on the ground-plane side with an oversized drill bit. Be careful not to drill out the holes; you just want to clear away the copper. Set the drill-press depth so that the bit can only drill through half the thickness of the board. 3) Drill all the ground holes. Do this last to prevent

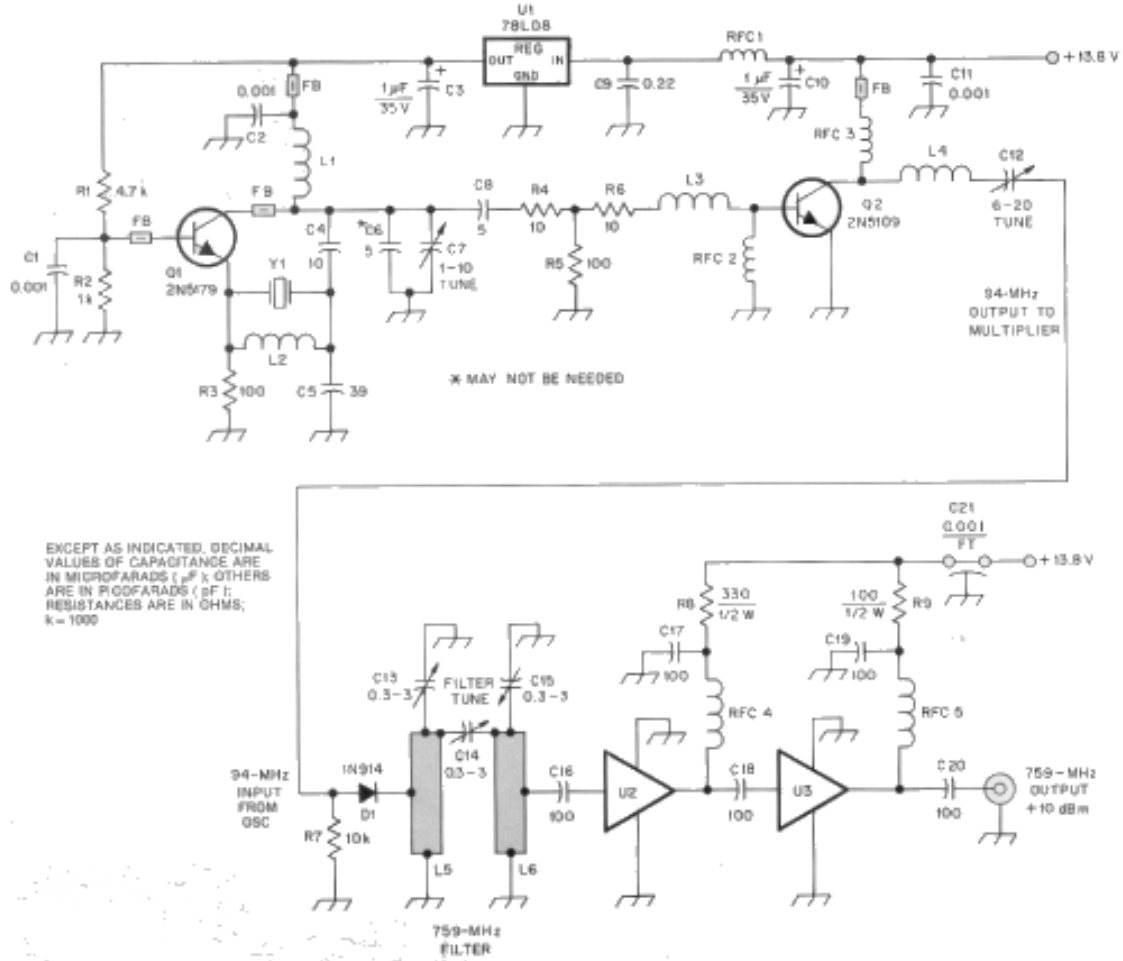


**Fig 1—Schematic diagram of the 759-MHz local oscillator. Capacitors are 50-V disc-ceramic types and resistors are ¼-W types unless otherwise noted.**

**C3, C10—1-µF, 35-V tantalum.**
**C6—5-pF ceramic; may not be needed.**
**C7—1-10-pF ceramic trimmer.**
**C12—6-20-pF ceramic trimmer.**
**C13, C14, C15—0.3-3-pF Johanson piston trimmer.**
**C16-C20—100-pF chip capacitor, 100 mil square.**
**C21—0.001-µF feedthrough.**
**D1—1N914/1N4148.**
**FB—ferrite bead.**
**L1—10 ts no. 24 enam wire, 0.1-in. ID, close wound.**
**L2—0.39-µH molded choke.**
**L3, L4—10 ts no. 24 enam wire, 0.1-in. ID, close wound.**
**L5, L6—microstrip filter poles. See artwork.**
**Q1—2N5179.**
**Q2—2N3866 or 2N5109.**
**RFC1, RFC2—0.39-µH molded choke.**
**RFC3—10 ts no. 22 enam wire, 1/8-in. ID, close wound.**
**RFC4, RFC5—12 ts no. 24 enam wire, 0.1-in. ID, close wound.**
**U1—78L08 8-V, 100-mA 3-terminal regulator.**
**U2—MMIC, Avantek MSA-0104, Mini-Circuits MAR1 or equiv.**
**U3—MMIC, Avantek MSA-0404, Mini-Circuits MAR4 or equiv.**
**Y1—94.875-MHz series-resonant crystal. See text.**

confusion about which holes get cleared.

After the board is drilled and cleared, drill two holes for C13 and C15. These holes are drilled on an angle to accommodate the length of the piston trimmer between the filter poles and ground on the reverse side of the board. See Fig 3. Drill the holes for the feedthrough capacitor (C21), the rivets (6 places) and the output SMA connector (if used). The rivets are pieces of wire that connect the top and bottom ground planes at critical RF grounding points on L5, L6, U2 and U3. A small piece of 50 Ω Teflon® - dielectric coax could be used between the LO and the power divider or next stage.

You can drill small divets into the PC board where the MMICs mount. Recessing the MMICs into the board slightly allows the two ground leads to be soldered directly to ground without the added inductances of the leads. Also the input and output leads will seat flush to the microstrip. This is a good practice to get into, especially at 1296 and 2304 MHz, where the few tenths of dB of extra gain add up fast.

All the components can be mounted next. Note that some components mount on the ground-plane side of the board and some mount on the etched side. D1, C14 and the 759-MHz amplifier parts all mount on the etched side of the board.

Insert the crystal last so you don't accidentally damage it. Place a piece of mica insulating material between the case (collector) of Q2 and the PC board to prevent shorting the collector supply to ground. Don't forget the hookup wire

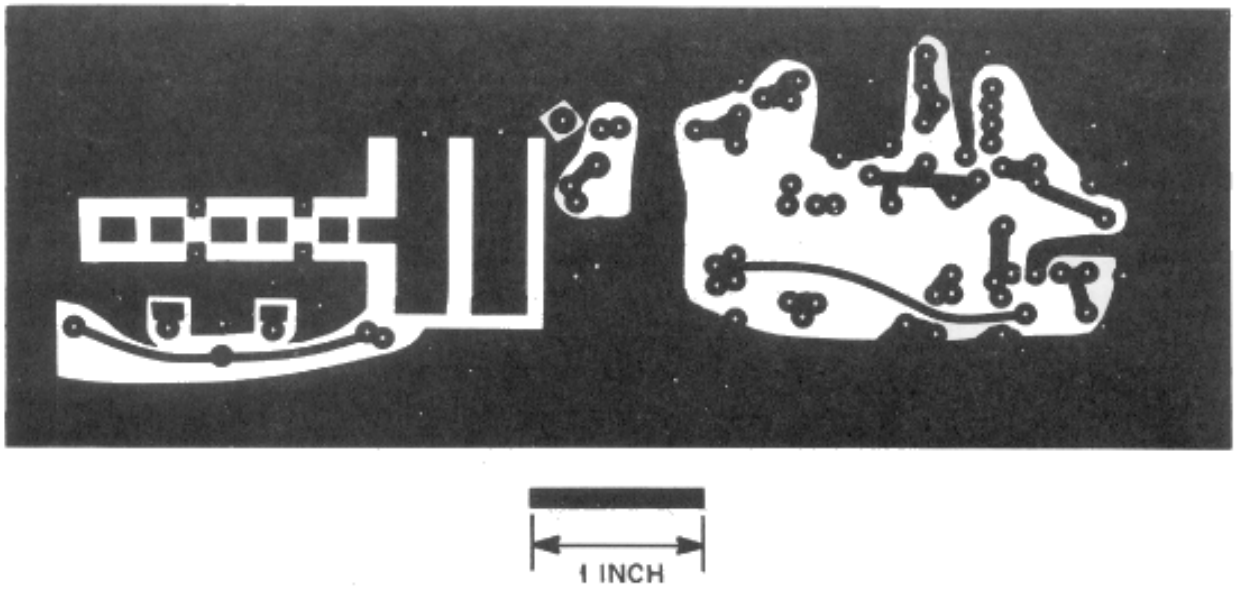


(A)

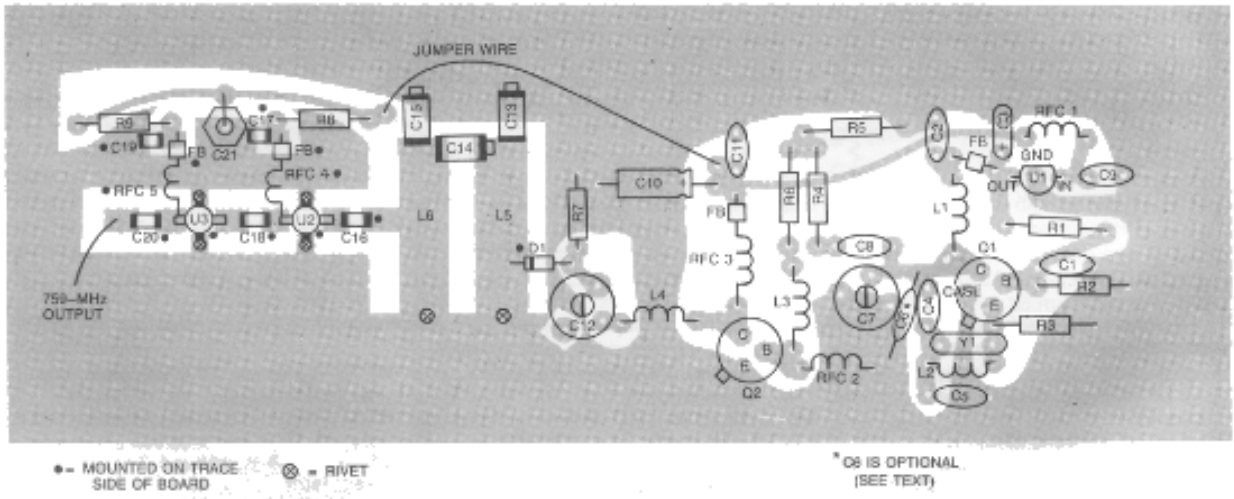


(B)

**Fig 2—Circuit-board etching pattern (A) and parts-placement diagram (B) for the 759-MHz LO. The etching pattern is shown full size from the etched side of the board. Black areas represent unetched copper foil. Board material is 1/16-in. G-10, double sided. The other side of the board is unetched to form a ground plane. The shaded area in B represents an X-ray view of the copper pattern. Some components are mounted on the etched side of the board; see text.**

between R8 and C10, as connection is not made on the PC board. Solder all grounds on both sides of the PC board. This also ensures that the unetched side of the PC board will be at RF ground.

Depending on your choice, many different enclosures can be used. I used the PC board itself as the top cover of the unit. Unetched PC-board scraps can be soldered to the LO board to create side walls, and a PC-board bottom cover can be added. Alternatively, all components could be mounted on the etched side of the PC board. Only U1, Q1 and Q2 require different orientation for etched-side mounting. The board could then be mounted inside a die-cast box, a milled housing or an aluminum box.

### Tune-Up

After mounting all components, install the crystal. Apply 13.8-V dc (12 to 14.5 V dc usable). Check to see that regulator U1 is working properly at 8-V dc output. Connect a spectrum analyzer and power meter to the output connector and adjust C7 for crystal oscillation and maximum amplitude on the analyzer at 759 MHz. Note that you may not need C6, depending on your crystal. If the oscillator starts reliably without C6, leave it out. Tune C12 for maximum output. Adjust the tap on L5

for maximum signal at 759 MHz, while tuning C12. Then tune C13, C14 and C15 for the cleanest signal and maximum power output. C14 will be near minimum capacitance for lowest harmonic content at 10-mW output.

Go back over all adjustments as needed to get the cleanest output and the required output level for your project. At 10 to 12 mW output, all harmonics are down at least 25 dB on most of my LOs.

If a cleaner LO signal is desired (harmonics down more than 25 dB), move the D1 tap a lot closer to ground on L5. Power output at 759 MHz will be about 10-dB lower, so add another MSA-0404 MMIC after U3. Retune the entire oscillator chain. All unwanted signals will be down 35 to 40 dB, and power output will be +10 dBm.

### Using the Oscillator Chain

There are other applications for this LO board. It can be used as an exciter for a 903-MHz beacon transmitter or as a crystal-controlled 903-MHz portable transmitter by installing the right crystal and shortening L5 and L6 by a few tenths of an inch. This is done by moving the rivet grounds up the line, which shortens the poles of the filter. The power level can be increased by adjusting the power supply up to 14.5 V dc, or by adding more amplifier stages. Key the MMIC dc supply with a 2N3906 PNP transistor for CW operation.

By changing the crystal frequency, this oscillator board can be used as the low-frequency portion of a microwave frequency multiplier chain. An output of 828 MHz could be used to drive an x4 frequency multiplier to 3312 MHz, the LO frequency for a 3456-MHz transverter with a 144-MHz IF.

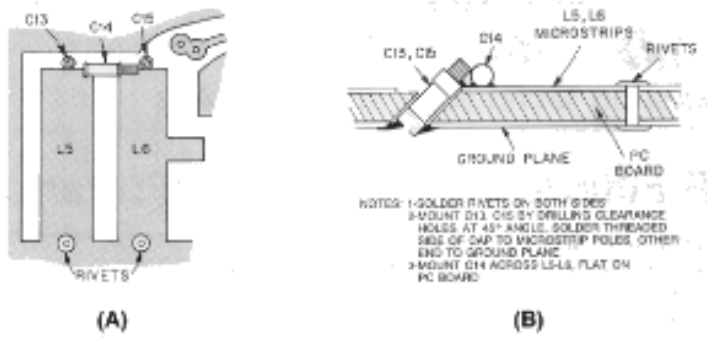


**Fig 3—Construction details for the two-pole filter.**
**The completed 759-MHz oscillator shown from the ground-plane side (A) and the etched trace side (B).**

### Conclusion

This LO design has been duplicated by several hams in the local area and used in their 903-MHz transverters. Dave Hackford, N3CX, uses this design as the exciter for his 903-MHz beacon. My 3456-MHz transverter uses an LO like this to generate an 828-MHz signal, which drives an interdigital x4 multiplier to 3312 MHz. Generating stable low-level RF at frequencies up to 1 GHz is easy with this design. The use of MMIC amplifiers makes it that much easier.