903 MHz Service Monitor Rover
WA3JUF 1987
Pout = +33dBm NF = 1.5dB

In the 80`s we needed a 903 rover rig. A club member had a Motorola Service Monitor that worked AM/FM/SSB on 903 MHz, among other bands.

A power amplifier, LNA, CW keying and T/R switching were added which made it a great (expensive) Rover station.

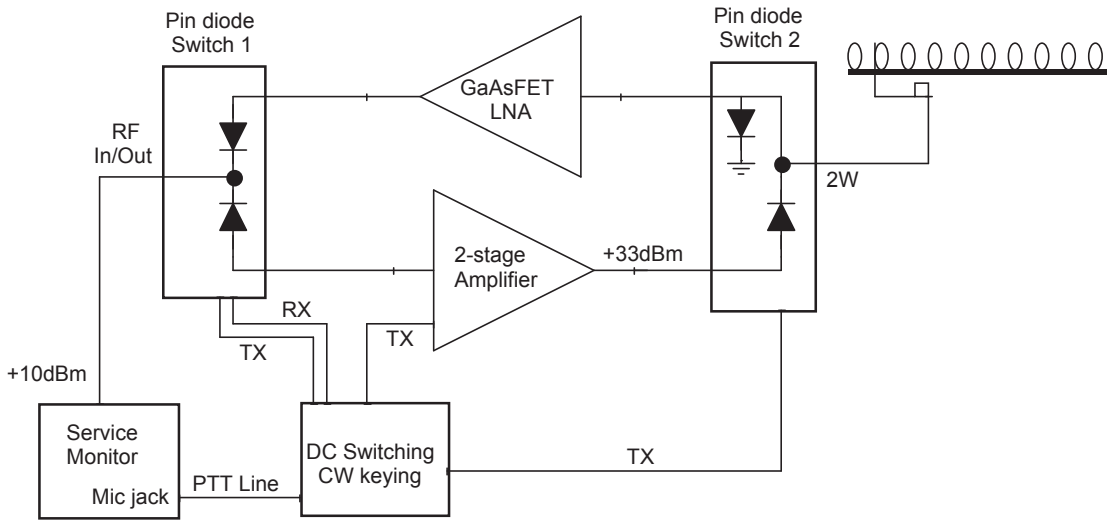

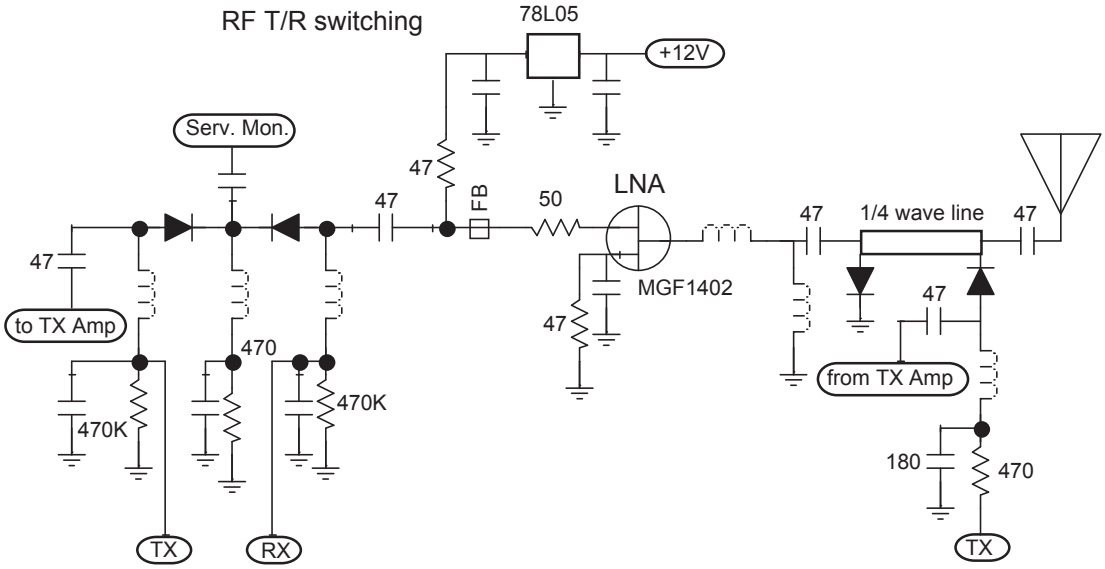

SM Rover DC switching
WA3JUF 1988
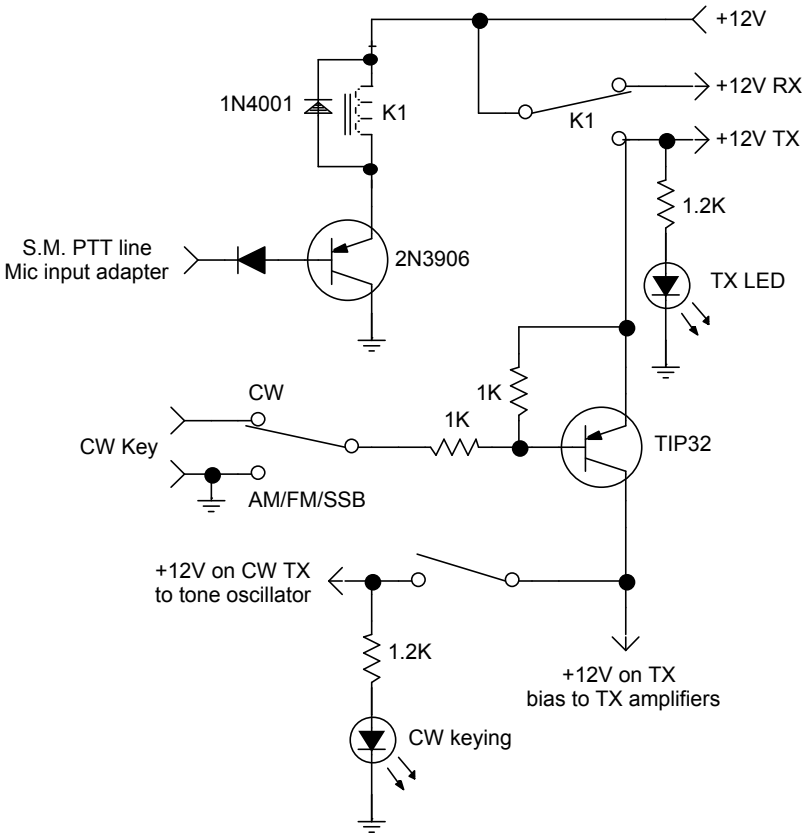
1. Service monitor modes: AM, FM, CW and SSB
   no CW keying - receives CW in SSB mode
2. TX Pout: +10dBm
3. Mic jack adapter w/PTT needed.