# 903 MHz 110W and 200W Linears  WA3JUF 1994

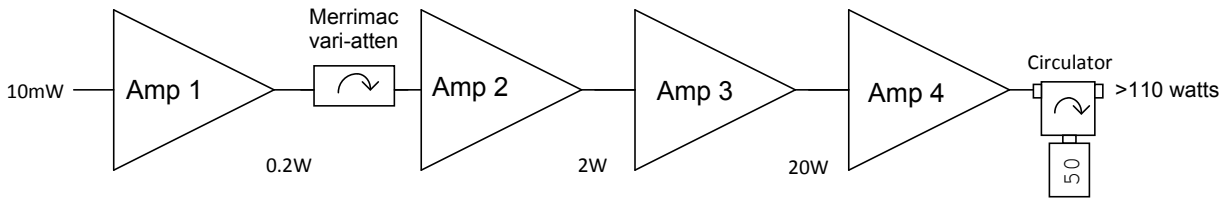

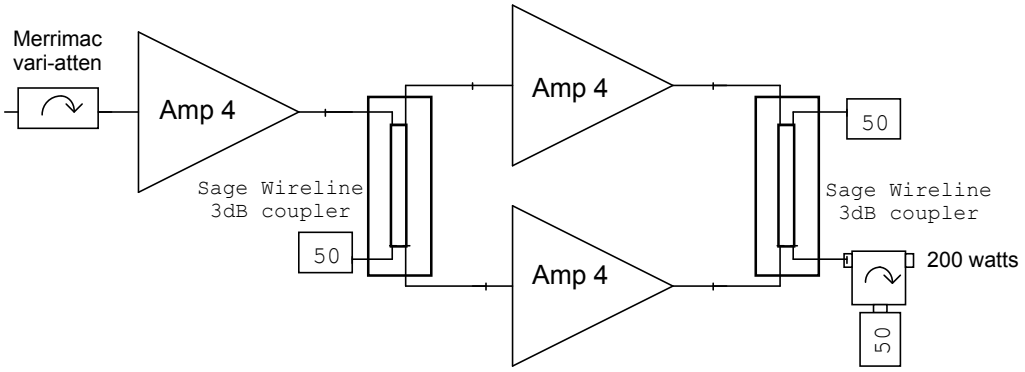
AMP 1 = SD1520
AMP 2 = 2 combined SD1520s
AMP 3 = AMR900-60A
AMP 4 = AMR960-100