35 Watt Linear Amplifier on 903-MHz
Gain ~30dB
by Dave Mascaro, W3KM 12/2001

This document describes a 35W amplifier using an SGS-Thomson Microelectronics STM901-30 module, designed for 860-900 MHz digital cellular radio base station application. This is not my design, I just modified and documented an existing test fixture design for Amateur service.

The module is a four-stage amplifier matched to 50-ohms input and output, with on board bias circuitry. Q1 and 2 are FETs, while Q3 and 4 are bipolar transistors. Four external potentiometers are used to set the idling current of each stage. Compared to the STM900-30 that didn't have on board bias, this design requires very simple dc circuitry. The DC power supply is applied to the module during transmit only, via a relay contact.

Standard 1/16" thick G-10 pc board can be used since the RF paths are very short. Teflon pc board can also be used. The width of the 50-ohm traces being adjusted to 0.085" for Teflon board. The pc board is mounted to an aluminum plate, which is screwed to a heatsink. Alternately, the pc board mount can be part of the heatsink itself. For best performance, the module mounting area should be milled about 0.100" lower than where the pc board mounts, so the leads can be soldered to the pc board without bending them. If you found a heatsink the right dimension or don't have access to a milling machine, good results can be obtained by bending the leads down to the pc board. This is because the module has more than enough gain and all RF grounds are connected to the module's mounting flange, not out through the leads. As with any high power RF amplifier, heatsink grease is used between the module flange and the mounting block <u>and</u> at the block to heatsink interface.

The input and output connectors are female 4-hole flanged type SMA connectors. Solder the flange to the ground plane side of the pc board to insure good RF grounding. It may be necessary to file off the corner of the mounting plate (or heatsink) in the area of the connector to accommodate the solder ferrule. The small holes in the pcb are either plated thru holes or soldered-in rivets. To prevent breakage of the chip bypass caps, it is advisable to solder them in place after mounting the connectors and pcb to the mounting plate.

Setup: Suitable 50-ohm loads are attached to the input and output connectors, no RF applied. The four pots are turned counter-clockwise. Connect a current meter in the 24V line and turn the 24V supply on via the TX/RX switch. The unit will draw 35-50mA without bias. Each succeeding adjustment is added to the current from the previous adjustment. After the bias is set, connect up the drive source and output load. Slowly turn up the drive for 30-35 Watts output. RF drive will be between 10 and 25mW (10-14dBm)

and the Ic will be 3.6 to 4 Amps at 24V. It goes without saying that the RF and DC are removed from the unit when disconnecting the input or output connections.

The bias on Q1 thru Q3 can be varied +/- 25mA which will allow you to tweak the amplifier for best gain and power output if you feel the need. Although the module was designed for a 26V power supply and 30W PEP output, it is advisable to run the unit on a regulated 24V power supply, since the quantity of modules is limited. Also, it will be more rugged under normal Amateur service; ie: input overdriven and power output exceeding the rated 30W PEP specification. {Smile}.

Note: The documentation on the ST web site has the pots wired so minimum bias occurred in the clockwise direction. I wired pins 1 & 2 of the pots together and connected pin 3 to the module, so the bias would be turned off in the CCW direction. The pc board artwork was made to accommodate different potentiometer configurations from leaded to SMD. I used the leaded pots and bent the leads to solder them to the pc board. The FET bias lines draw about 3mA off the trim pots and the bipolar bias lines run 5-10mA, so miniature trim pots work just fine.

35W 903-MHz Linear Amplifier

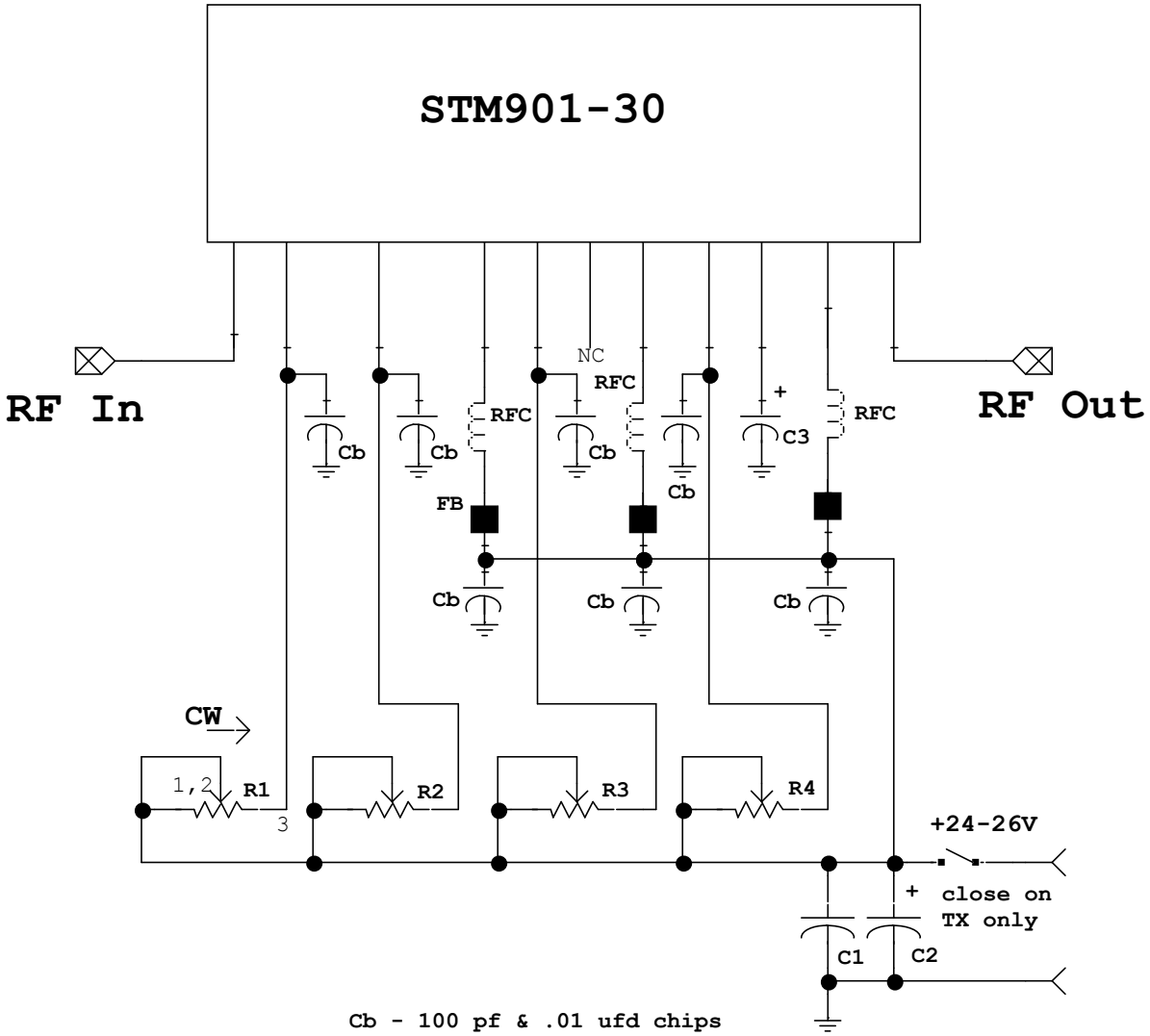

Cb - 100 pf & .01 ufd chips
R1-4 - 20K-ohm multi-turn pots
C1 - .01 ufd chip
C2 - 100 ufd/50V electro
C3 - 22 ufd/35V tantalum
FB - ferrite bead on RFC
RFC - 6t,#28, 1/8" ID

Bias adjustments:
Connect a 1 amp meter in the 24V line.
No drive idling current (all pots set CCW) = 35-50 mA
Stage 1, R1: Icq = 100 mA
Stage 2, R2: Icq = 200 mA
Stage 3, R3: Icq = 50 mA
Stage 4, R4: Icq = 150 mA

1:1 Artwork for 0.062” G-10 PCB

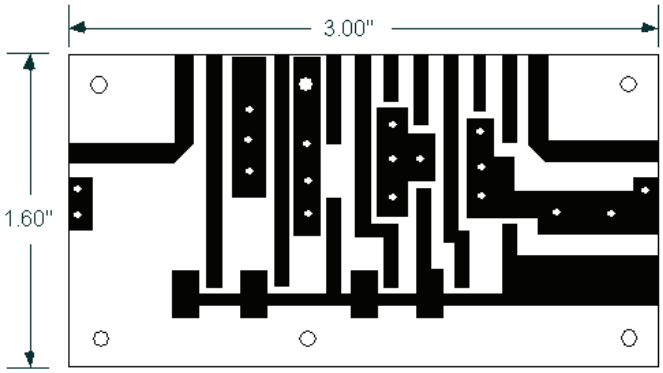

The dimensions are shown to verify the scale of the artwork. If viewing this image in MS Word, you can drag the lower right corner of the image to produce a 1:1 drawing when you print it on your laser printer.

4-40 cap screws are used to mount the pc board to the mounting plate, and to mount the module in place. 2-56 cap screws are used to mount the SMA connectors.

35W 903-MHz Linear Mounting Plate

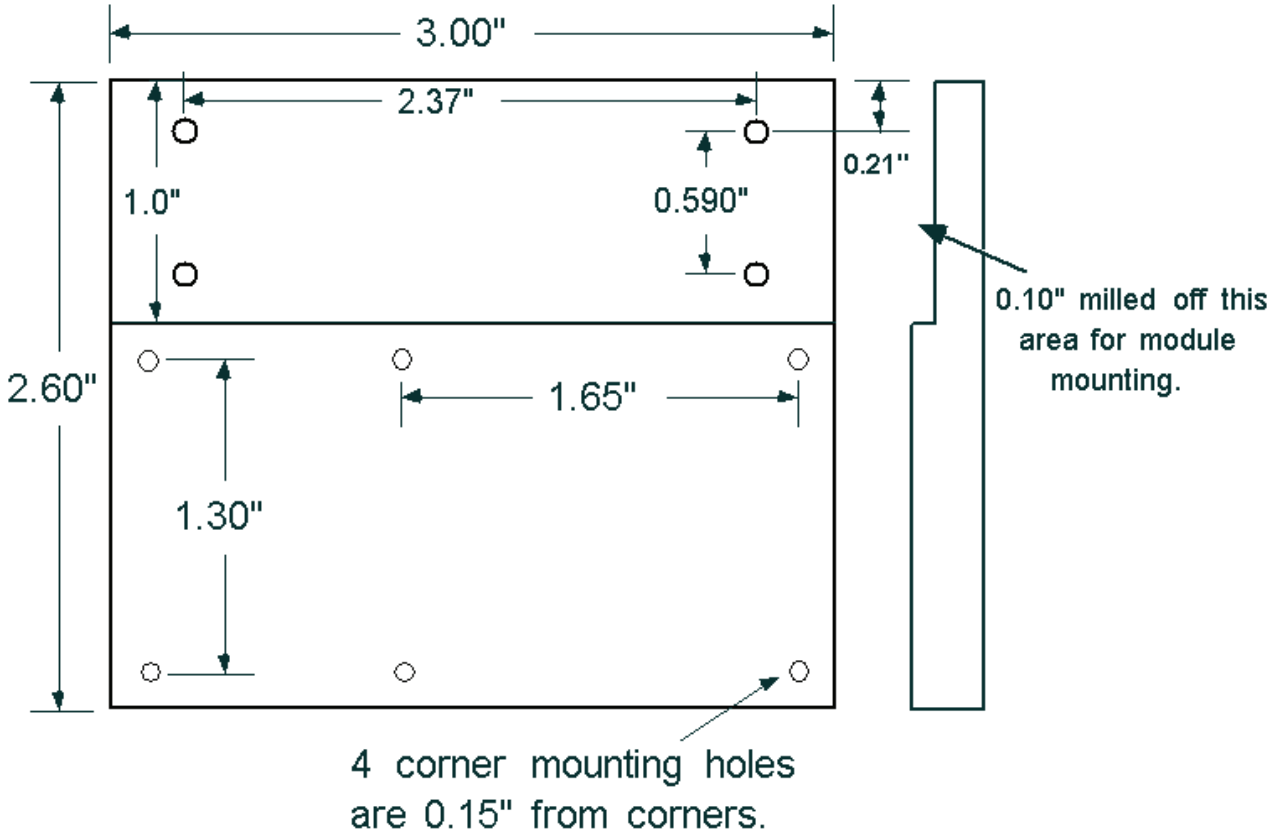

35 Watt Amplifier Component placement

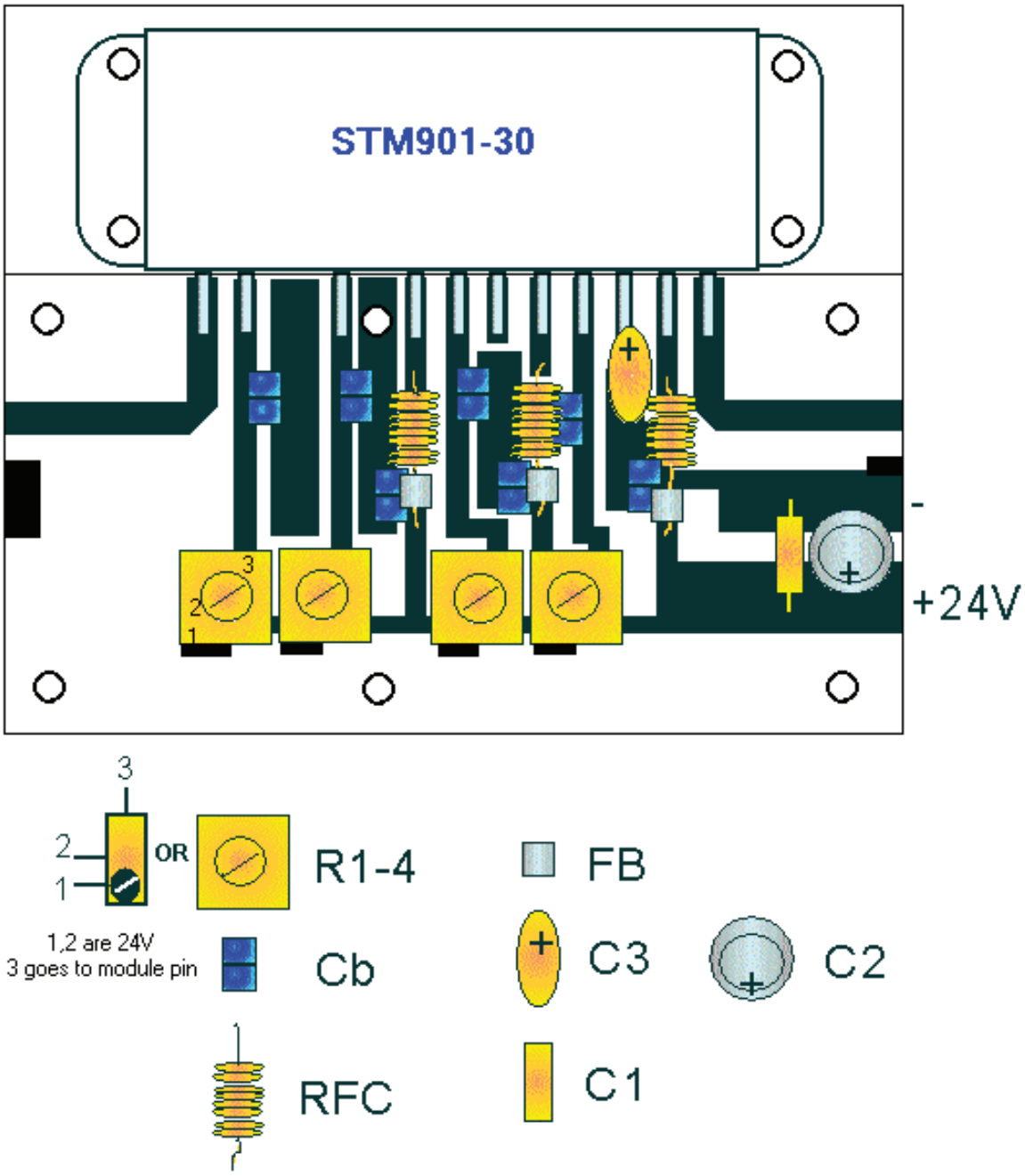

903 MHz 65W Linear W3KM 2001

using 2 x STM901-30 modules

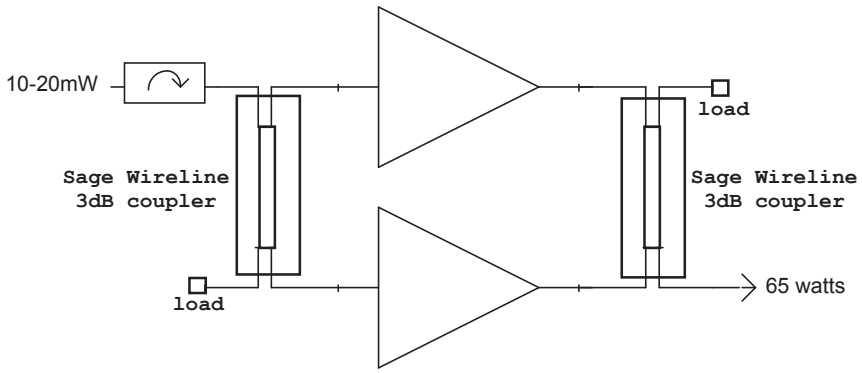

903 MHz Linear Amplifier - W3KM - 09/2004

Sample STM901-30 modules are no longer available.

w3km at verizon dot net
http://www.qsl.net/w3km

SGS-THOMSON MICROELECTRONICS

STM901-30

RF POWER MODULE
LINEAR BASE STATION APPLICATIONS

- LINEAR POWER AMPLIFIER
- 860 - 900 MHz
- 26 VOLTS
- INPUT/OUTPUT 50 OHMS
- P_{OUT} = +44.7 dBm PEP
- GAIN = 35 dB MIN.

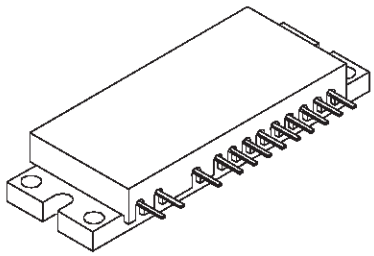

CASE STYLE H141

ORDER CODE	BRANDING
STM901-30	STM901-30

PIN CONNECTION

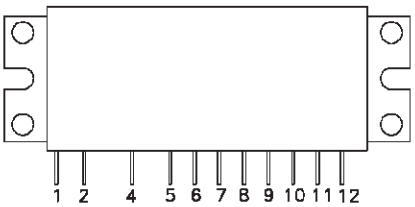

1. RF Input	2. V_{G1}	3. deleted	4. V_{G2}
5. V_D	6. V_{B1}	7. Cap_1	8. V_{C1}
9. V_{B2}	10. Cap_2	11. V_{C2}	12. RF Output

DESCRIPTION

The STM901-30 module is designed for digital cellular radio base station applications in the 860-900 MHz frequency range operating at 26V.

The STM901-30 is designed to meet the low distortion, high linearity requirements of modern digital cellular base station equipment.

ABSOLUTE MAXIMUM RATINGS (Tcase = 25°C)

Symbol	Parameter	Value	Unit
V, V_D, V_{C1}, V_{C2}	DC Supply Voltage	28	Vdc
I_{Q1}	Bias Current @ V = 26V, 1st Stage	0.40	Adc
I_{Q2}	Bias Current @ V = 26V, 2nd Stage	0.40	Adc
I_{Q3}	Bias Current @ V = 26V, 3rd Stage	0.54	Adc
I_{Q4}	Bias Current @ V = 26V, 4th Stage	1.62	Adc
P_{IN}	RF Input Power (P_{OUT} < 44.7 dBm PEP)	14	dBm PEP
P_{OUT}	RF Output Power (V = 26V)	48	dBm PEP
T_{STG}	Storage Temperature	– 30 to +100	°C
T_{OPER}	Operating Temperature	– 30 to +100	°C

MODULE DC AND TEST FIXTURE CONFIGURATION

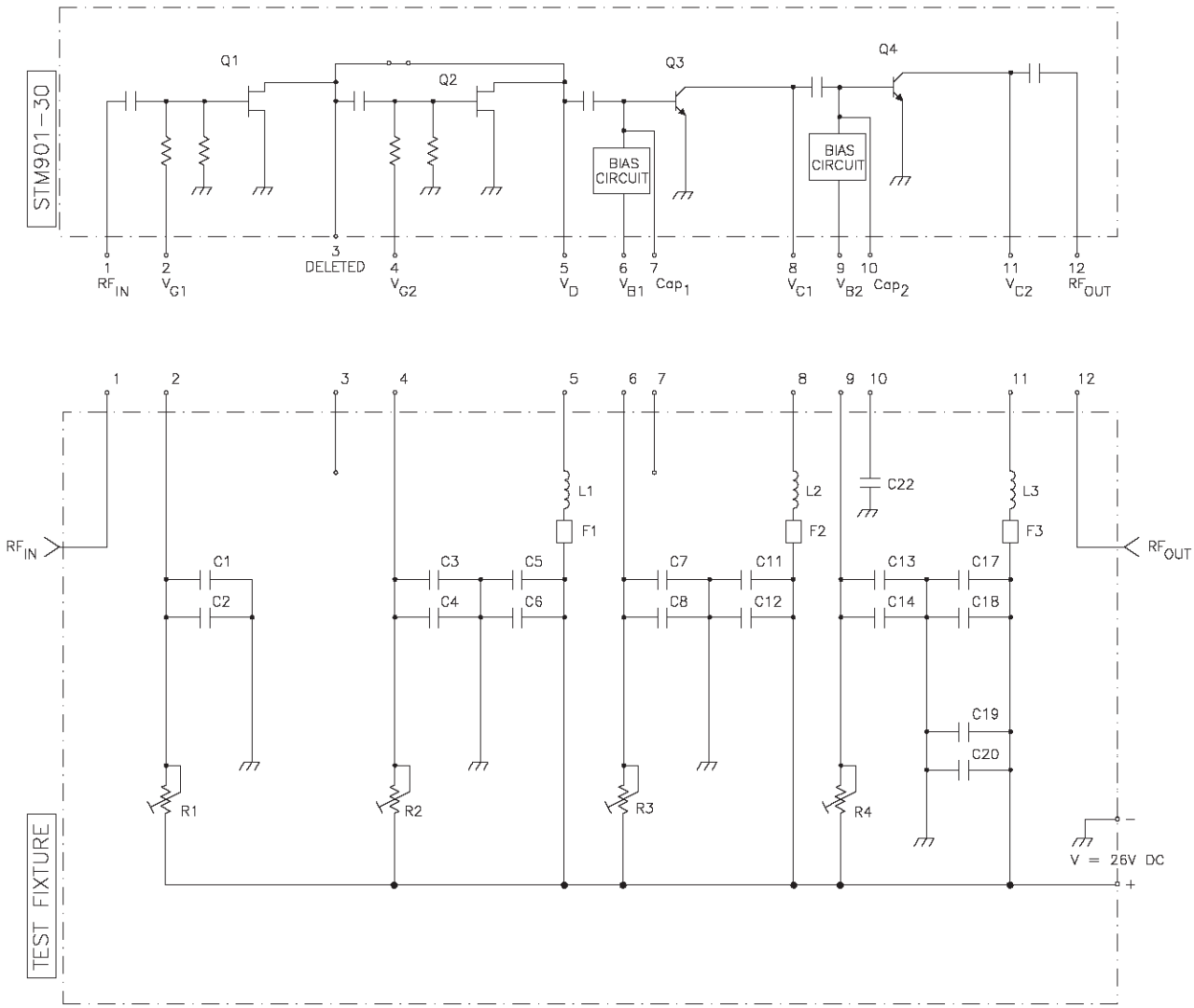

C1, C3, C5, C7, C11, C13, C17 : 100 pF
C2, C4, C6, C8, C12, C14, C18 : .001 µF
C19 : .1 µF
C20, C22 : 100 µF
F1, F2, F3 : FAIR-RITE #2664000101
L1, L2, L3 : 5 Turns of 24 AWG Wire, Inner Diameter 1.27mm
R1, R2, R3, R4 : 20 KOHM

Setting Bias: (Ex.: I_{Q1} = .1A, I_{Q2} = .18A, I_{Q3} = .050A, I_{Q4} = .150A)

1. Set all variable resistors clockwise. (No bias current flows through transistors when all variable resistors are set clockwise.)
2. Record stationary current I_O.
3. Adjust R1 for (I_O + 100)mA.
4. Adjust R2 for (I_O + 100 + 180)mA.
5. Adjust R3 for (I_O + 100 + 180 + 50)mA.
6. Adjust R4 for (I_O + 100 + 180 + 50 + 150)mA.

PACKAGE MECHANICAL DATA

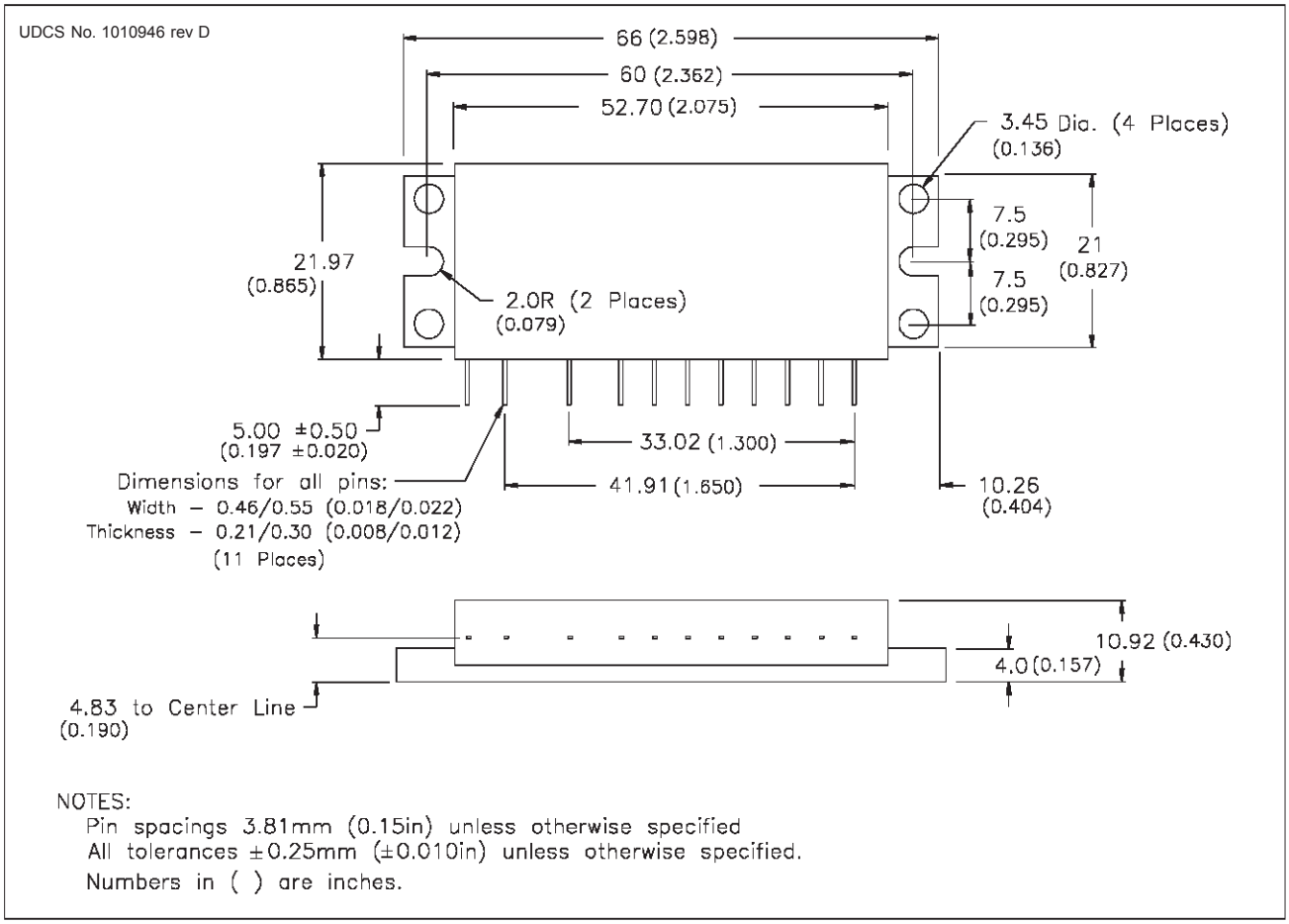

Information furnished is believed to be accurate and reliable. However, SGS-THOMSON Microelectronics assumes no responsibility for the consequences of use of such information nor for any infringement of patents or other rights of third parties which may result from its use. No license is granted by implication or otherwise under any patent or patent rights of SGS-THOMSON Microelectronics. Specifications mentioned in this publication are subject to change without notice. This publication supersedes and replaces all information previously supplied. SGS-THOMSON Microelectronics products are not authorized for use as critical components in life support devices or systems without express written approval of SGS-THOMSON Microelectronics.

©1997 SGS-THOMSON Microelectronics - All Rights Reserved

SGS-THOMSON Microelectronics GROUP OF COMPANIES
Australia - Brazil - Canada - China - France - Germany - Italy - Japan - Korea
Malaysia - Malta - Morocco - The Netherlands - Singapore - Spain - Sweden - Switzerland
Taiwan - Thailand - United Kingdom - U.S.A.

RF Products Division
141 Commerce Drive Montgomeryville, PA 18936
tel 215-361-6400 fax 215-362-1293