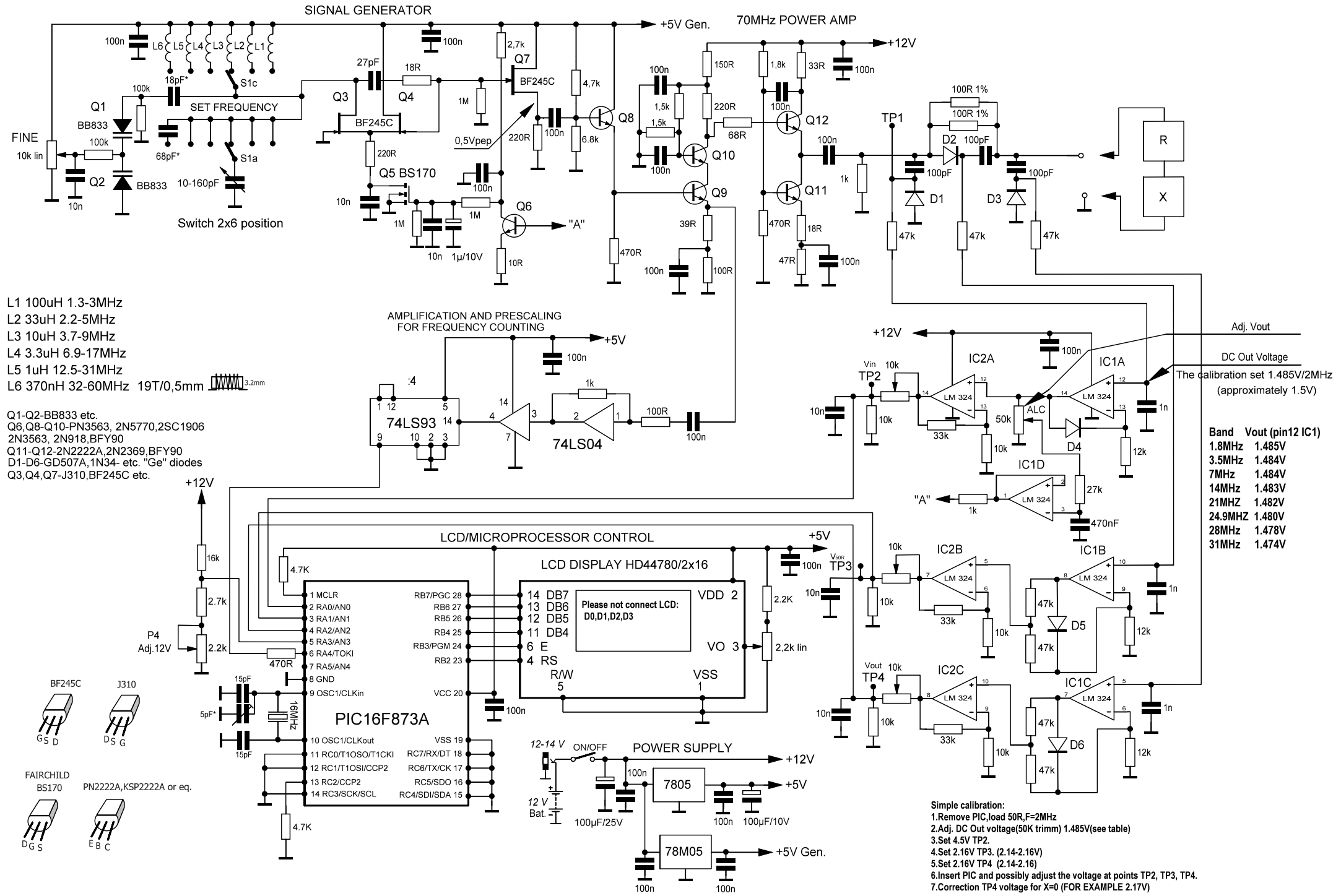AERIAL ANALYSER VK5JST by SP2JJH